1.概述 SUMMARIZE

1.1产品特点

NMRV系列蜗轮蜗杆减速器具有以下一些主要特点：
1.优质铝合金铸造，重量轻，不生锈；
2.输出扭矩大；
3.传动平稳，噪音小，适合在恶劣环境中长期连续工作；
4.散热效率高；
5.美观耐用，体积小；
6.可适应全方位安装。

1.2主要材料

1.外壳：铝合金（机座：025-090），铸铁（机座：110-150）；
2.蜗杆：20Cr，渗碳淬火，齿面硬度56-62HRC，精磨后保持渗碳层厚度0.3-0.5mm；
3.蜗轮：耐磨锡青铜。

1.3表面涂装

铝合金外壳：
1.先抛丸处理，再经特种防腐处理，保持银白金属感，并耐汽油，二甲苯等有机溶剂的腐蚀；
2.磷化处理后，再喷RAL5010蓝色或银白色涂料。
铸铁外壳：先涂红色防锈漆，后喷涂RAL5010蓝色涂料。

1.SUMMARIZE

1.1. PRODUCTS CHARACTERISTICS

NMRV series worm gear units is a new-generation of product developed by our company on the basis of perfecting WJ series products with a compromise of advanced technology both at home and abroad,
its main features are as follows;
1.Made of high-quality aluminum alloy,light in weight and non-rusting.
2.Large in output torque.
3.Smooth in running and low in noise,can work long time in dreadful conditions.
4.High in radiating efficiency.
5.Good-looking in appearance,durable in service life and small in volume.
6.Suitable for omnibearing installation.

1.2MAIN MATERIALS

1.Housing:die-cast aluminum alloy(frame size:025to 090);cast iron(frame size:110 to 150);
2.worm:20Crm,carbonize & quencher heat treatment make the hardness of gear's surface up to 56-62 HRX,retain carburzation layer's thickness between 0.3 and 0.5mm after precise grinding.
3.worm wheel:wearable stannum bronze alloy.

1.3SURFACE PAINTING

Aluminum alloy housing:
1.Shot blasting and special antiseptic treat-ment on the aluminum alloy surface.
2.After phosphating,paint with RAL5010 blue or silvery white paint.
Cast iron housing
First paint with red antirust paint,then paint whith RAL 5010 blue or silvery white paint.

2.型号说明 MODEL ILLUMINATE

2.1NMRV/NRV蜗轮蜗杆减速电机与减速器WORM GEARED MOTOS AND WORM GEAR UNITS

减速器 Gear unit								电机 Motor		
NMRV	075	40	E	FA1	DZ1	80B5	B3	8014或/or 0.55-4	/	1
①	②	③	④	⑤	⑥	⑦	⑧	⑨		⑩

No	说　　明	Comments
1	型号代码： 1.NMRV孔输入带输入法兰 2.NRV轴输入不带输入法兰	Model code 1.NMRV:Hole input with flange 2.NRV:Shaft input without flange
2	蜗轮蜗杆减速器中心距（规格）	Central distance of worm gear units(spec)
3	减速器速比 i=5,7.5,10,15,20,25,30,40,50,60,80,100.	Speed ratio of reducer (i=7.5;10;15;20;25;30;40;50;60;80;100)
4	1.无代号表示不带蜗杆同向尾出轴 2.E：带蜗杆同向尾出轴	1.No mark means single extension wormj shaft 2.E:Double extension worm shaft
5	1.无代号表示不带输出法兰 2.FA，FB，FC，FD，FE（1/2）：输出法兰号和位置	1.No mark means without output flange 2.FA，FB，FC，FD，FE（1/2）：output Flange and position
6	1.无代号表示孔输出 2.DZ（1/2）：单向输出轴和位置 3.SZ：双向输出轴	1.No mark means hole output 2.DZ(1/2):Single output shaft and position 3.SZ:Double output shaft
7	输入法兰规格型式（不带电机时）	Normalized from of input flange(without motor)
8	安装方位代号	Installation position code
9	1.无代号表示不带电机 2.电机型号或功率，极数	1.No mark means without motor 2.Model motos(poles of power)
10	电机接线盒位置，默认位置1可以不写	Position diagram for motor terminal box default position 1 not to write out is ok

2.2PC-NMRV前置齿轮蜗轮蜗杆减速器/WORM GEARS WITH PRE-STAGE HELICAL UNITS

PC	071	-	NMRV	075	-	40	E	FA1	DZ1	B3
①	②		③	④		⑤	⑥	⑦	⑧	⑨

No	说　　明	Comments
1	前置斜齿轮减速代号	Helical Pre-stage unit
2	电机座号	Motor frame size
3	型号代码 孔输入带输入法兰NMRV 轴输入不带输入法兰NRV	Model code 1.NMRV:Hole input with flange 2.NRV:Shaft input without flange
4	减速器中心距（规格）	Central distance of worm gear units(spec)
5	减速器速比 （i=5;7.5;10;15;25;30;40;50;60;80;100）	Speed ratio of reduce r(i=7.5;10;15;20;25;30;40;50;60;80;100)
6	1.无代号表示不带蜗杆同向尾出轴 2.E：带蜗杆同向尾出轴	1.No mark means single extension worm shaft 2.E:Double extension worm shaft
7	1.无代号表示不带输出法兰 2.FA，FB，FC，FD，FE（1/2）：输出法兰代号和位置	1.No mark means without output flange 2.FA,FB,FC,FD,FE(1/2):output Flange and position
8	1.无代号表示孔输出 2.DZ（1/2）：单向输出轴和位置 3.SZ：双向输出轴	1.No mark means hole output 2.DZ（1/2）:Single output shaft and position 3.SZ:Double output shaft
9	安装方位代号	Installation position code

2.3DRV双蜗轮蜗杆减速器/COMBINATION WORM GEAR UNITS

DRV	050/110	-	900	-	E	FA1	DZ1	71B5	B3
①	②		③		④	⑤	⑥	⑦	⑧

No	说　　明	Comments
1	型号代码 1.DRV双联体蜗轮蜗杆减速器	Mode code 1.DRV duplex worm reducer
2	蜗轮蜗杆减速器中心距（规格）	Central distance of worm gear units(spec)
3	减速器速比	Speed ratio of reducer
4	1.无代号表示不带蜗杆同向尾出轴 2.E带蜗杆同向尾出轴	1.No mark means single extension worm shaft 2.E:Double extension worm shaft
5	1.无代号表示不带输出法兰 2.FA，FB，FC，FD，FE（1/2）：输出法兰代号和位置	1.No mark means without output flange 2.FA,FB,FC,FD,FE(1/2):output Flange and position
6	1.无代号表示孔输出 2.DZ（1/2）：单向输出轴和位置 3.SZ：双向输出输轴	1.No mark means hole output 2.DZ(1/2):Single output shaft and position 3.SZ:Double output shaft
7	输入法兰规格型式	Normalized form of input flange
8	安装方位代号	Installation position code

2.4UDL-NMRV无级变速器与蜗轮蜗杆减速器组合
Combination of stepless speed variator and worm gear units

UD	L	010-	NMRV	063-40	E	FA1	DZ1	B3
①	②	③	④	⑤ ⑥	⑦	⑧	⑨	⑩

No	说　　明	Comments
1	无级变速器代号	Code of stepless speed variator
2	铝合金机壳，不标注时为铸铁机壳	Aluminium alloy housing,and no mark means cast iron casing
3	无极变速器机座号	CVT model
4	蜗轮蜗杆减速器代码	Code of worm gear units
5	蜗轮蜗杆减速器中心距（规格）	Central distance of worm gear units(spec)
6	蜗轮蜗杆减速器速比	Speed ratio of worm gear units
7	1.无代号表示不带蜗杆同向尾出轴 2.E：带蜗杆同向尾出轴	1.No mark means single extension worm shaft 2.E:Double extension worm shaft
8	1.无代号表示不带输出法兰 2.FA，FB，FC，FD，FE（1/2）：输出法兰代号和位置	1.No mark means without output flange 2.FA,FB,FC,FD,FE(1/2):Output Flange and position
9	1.无代号表示孔输出 2.DZ（1/2）：单向输出轴和位置 3.SZ：双向输出轴	1.No mark means hole output 2.DZ（1/2）:Single output shaft and position 3.SZ:Double output shaft
10	安装方位代号	Installation position code

订单时请说明是否带电机，一般按不带电机供应。
When ordering,you should show whether the reducers are equipped with motors,otherwise reducers aren't supplied with motors.

3.选型相关参数 RELEVANT PARAMETER

3.1功率P

P1=P2/η（kw）
P1n≥P1·Fs（kw）

P1　输入功率
P2　输出功率
P1n　输入电机额定功率
fs　使用系数
η　传动效率

在NRV蜗轮选型表中，这个功率P1n是指在输入转速为n1并且对应的使用系数fs=1时，蜗轮安全的输入功率，单位kw。
传动效率η值是蜗轮经过足够长时间的跑合后计算得到的。跑合后在动转过程中，表面温度下降并最终稳定。需要特别强调的是样本中给定的额定转矩值M2n应该考虑到传动功率η的关系。

3.1Power P

P1=P2/η（kw）
P1n≥P1·Fs（kw）

P1　Input power
P2　Output power
P1n　Rated input motor power
fs　Service factor
η　Transmission efficiency

The parameter can be found in the NRV gear-box rating charts and represents the Kw that can be safely transmitted to the gearbox,based on input speed η 1 and service factor fs=1
Values of η d are calculated for gearboxes after a sufficiently in oreration reduces and finally stabilizes.It may be worth highlighting that values of rated torque m2n given in the catalogue take the transmission efficiency η d into consideration

3.2转速n

n1减速器输入转速
n2 减速器输出转速
若是减速箱外部传动装置驱动，为了优化工作条件和提高使用寿命，建议使用1400r/min或更低转速。

3.2 ROTATION SPEED N

n1 Gear units input speed
n2 Gear units output speed
If driven by the external gearing,1400r/min or lower rotatio n speed is suggested so as to optimize the working conditions and prolong the service life.

3.3 传动比 i

$i=n_1/n_2$

3.3 TRANSMISSION RATIO I

$i=n_1/n_2$

3.4 扭矩 M

$M_2=9550 \cdot P1 \cdot \eta/n2$ (Nm)
$M_{2n} \geq M2 \cdot fs$(Nm)

M2　输出扭矩
M2n　额定输出扭矩
P1　输入功率
η　传动效率
fs　使用系数

3.4 TORQUE M

$M_2=9550 \cdot P1 \cdot \eta/n2$ (Nm)
$M_{2n} \geq M2 \cdot fs$(Nm)

M2　Output torque
M2n　Rated output trque
P1　Input power
η　Transmission efficiency
fs　Service factor

3.5 使用系数 fs

减速器上的从动机构的受驱动效果是用使用系数fs 这个系数来衡量的。该使用系数根据每天的运转时间和启动频率Z而定的。三种负载分类取决于惯性加速系数，在下图中可读取实际应用的使用系数，按这图表选取的使用系数必须小于或者等于性能参数表中提供的使用系数。

3.5 SERVICE FACTOR FS

The effect of the driven machine on the gear unit is taken into account to a sufficient level of accuracy using the service factor fs.The service factor is determined according to the daily operating time and the starting frequency Z. Three load classifications are considered depending on the mass acceleration factor.You can read off the service factor applicable to your application in following figure.The service factor selected using this diagram must be less than or equal to the service factor as given in the performance parameter table.

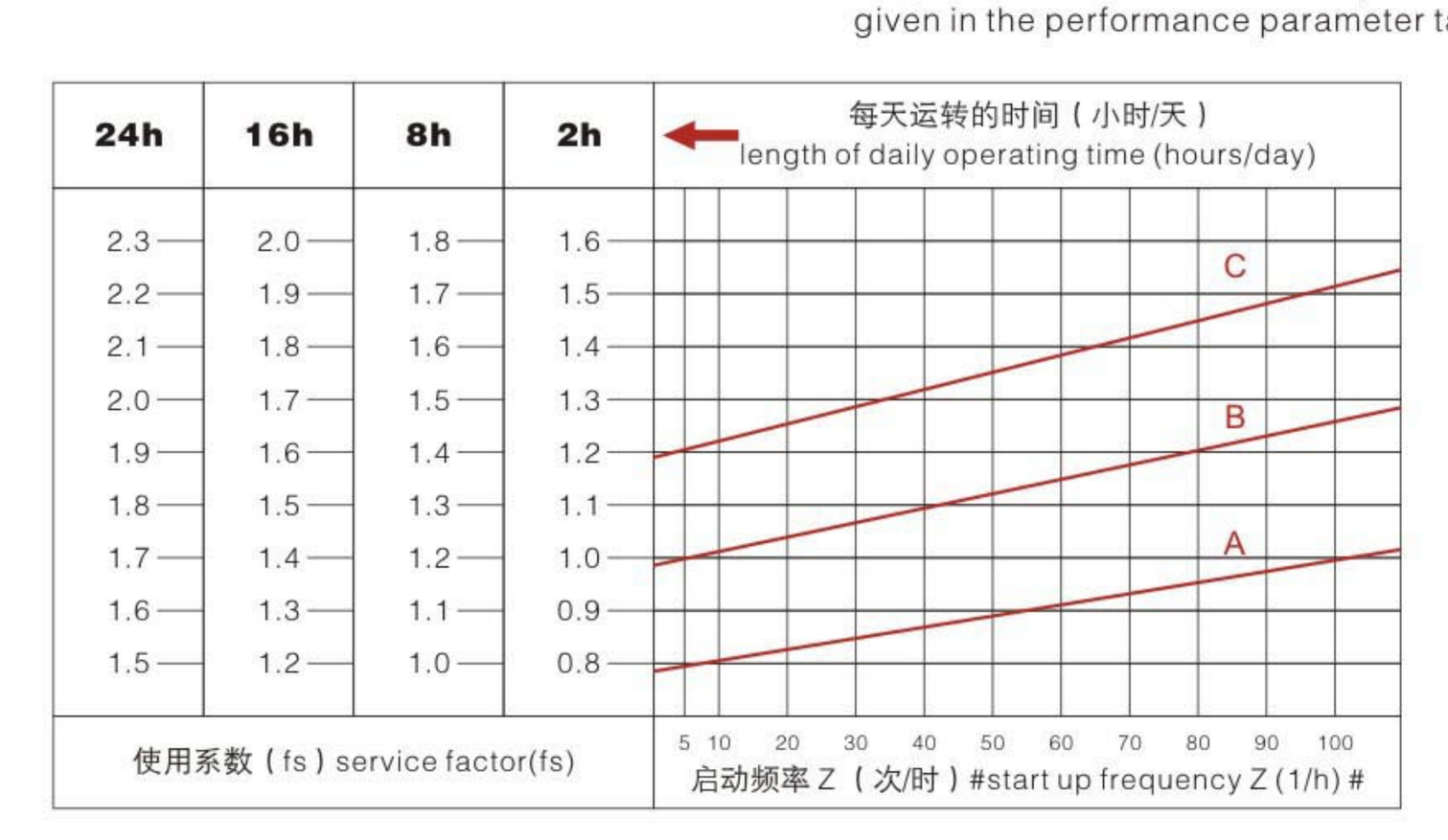

启动频率Z：周期包括所有启动，制动的次数以及变速电机高低速变化时的次数。
Starting frequency Z:The cycles include all starting and braking procedures as well as change overs from low to high speed.

3.5.1负载类型

负载性质：
A 均匀冲击负载，允许惯性加速系数Fa≤0.3
B 中等冲击负载，允许惯性加速系数Fa≤3
C 重冲击负载，允许惯性加速系数Fa≤10

3.5.1 LOAD CLASSIFICATIONS

Type of load:
A Uniform,permitted mass acceleration factor Fa≤0.3
B Moderate shock load,permitted mass acceleration factor Fa≤3
C Heavy shock load,permitted mass acceleration factor Fa≤10

负载类型：

轻负载的螺杆输送，风扇，装备线，输送带，小型搅拌器，电梯，清洗机器，过滤器，控制驱动。

卷扬机，木工机器进料器，货物起重机，平衡器，绞螺纹机器，中型搅拌器，重型输送带，绞盘，滑动闸门，刮料机，包装机械，混凝土搅拌机，行车驱动装置，铣床，齿轮泵。

大型搅拌器，剪床，压机，离心机，旋转支撑装置，重型绞盘和起重机，磨床，石材打磨机，翻斗机，钻床，冲床，凸轴压机，摺床，机床转盘，翻桶装置，振荡装置，破碎机。

Load Classifications:
Screw feeders for light materials,fans,assermbly lines,conveyor belts for light materials,small mixers,lifts,cleaning machines, medium mixers,conveyor belts for heavy materials,winches,sliding doors,fertilizer scrapers,packing machines,concrete mixers, crane mechanisms,milling cutters.folding machines,gear pumps.
Mixers for heavy materials,shears,presses centrifuges,rotating supports,winches and lifts for heavy materials,grinding lathes, stone mills,bucket elevators,drilling machines,hammer mills,campresses,folding machines,turntables,tumbling barrels, vibrators,shredders

3.5.2 惯性加速系数

惯性加速系数计算如下：

Fa=Jc/Jm

Fa 惯性加速系数
Jc 所有外部传动惯量（kgm^2）
Jm驱动电机的传动惯量（kgm^2）
如果惯性加速系数fa＞10，请与我们技术部联系。

受环境温度影响，使用系数fs 仍须按以下调整：
1.环境温度30~40℃：fs×（1.1~1.2）
2.环境温度40~50℃：fs×（1.3~1.4）
3.环境温度50~60℃：fs×（1.5~1.6）
4.环境温度＞60℃，请与我们技术服务人员联系。

为了保持减速器的使用寿命，从产品样本中所选择的使用系数fs应等于或略高于计算出的使用系数fs.

3.6径向载荷Fr

在决定影响径向载荷时，安装在轴端上的传动件类型必须考虑在内，不同类型的传动对应不同传动附加系数fz,列表如下：

3.5.2 MASS ACCELERATION FACTOR

The mass acceleration factor is calculated as follows :

Fa=Jc/Jm

Fa Mass acceleration factor
Jc All external mass moments of inertia (kgm2)
Jm Mass moment of inertia on the motor end (kgm2)
If mass acceleration factors fa＞10，please call our Technical Service.

Service factor fs should be adjusted as followings:
1.ambient temperature is 30~40℃：fs×（1.1~1.2）
2.ambient temperature is 40~50℃：fs×（1.3~1.4）
3.ambient temperature is 50~60℃：fs×（1.5~1.6）
4.ambient temperature is＞60℃,please call our Technical Service.

To keep the service-life of gear units,the use factor fs selected from the catalogue must be equal or slightly higher than the calculated use factor fs

3.6 RADIAL LOADS FR

When determining the resulting radial loads,the type of transmission elements,mounted on the shaft end must be considered,Varous transmission elements are corresponding with following transmission element factors fz.

传动件 Transmission element	传动附加系数Fz Transmission element factor Fz	注释 Comments
齿轮Gears	1.00	≥17齿 teeth
	1.15	＜17齿 teeth
链轮 Chain sprockets	1.00	≥20齿 teeth
	1.25	＜20齿 teeth
	1.40	＜13齿 teeth
V带轮Narrow V-belt pulleys	1.75	有预紧力作用 Influence of the tensile force
平带轮 Flat belt pulleys	2.50	有预紧力作用 Influence of the tensile force
齿带轮 Toothed belt pulleys	2.50	有预紧力作用 Influence of the tensile force

作用在轴上的径向载荷按如下公式计算：

$$Fr=\frac{M\cdot 2000\cdot fz}{d_0}\ (N)$$

Fr 作用在轴上的载荷（N）
M 作用在轴上的扭矩（Nm）
d0 安装在轴上传动件的平均直径（mm）
Fz 传动附加系数

The overhung loads exerted on the motor or gear shaft is then calculated as follows.

$$Fr=\frac{M\cdot 2000\cdot fz}{d_0}\ (N)$$

Fr Resulting radial load（N）
M Torque on the shaft（Nm）
d0 Mean diameter of the mounted transmis sion element in (mm)
Fz Transmission element factor

选型相关参数 RELEVANT PARAMETER

当径向负荷不作用在轴中点时，按以上下公式计算有效负荷：

$$F \times L \leqslant \frac{Fr2 \cdot a}{(b+x)} (N)$$

Fr2　依据下面表格给出中底脚安装式齿轮减速器的许可径向载荷（X=L/2）（N）
a,b　齿轮减速器径向换算常量(mm)
X　轴户到实际作用点的距离(mm)
a,b,Fr2 的数值在下面表格给出：

The allowed radial load force on the shaft is calculated with the following formula:

$$F \times L \leqslant \frac{Fr2 \cdot a}{(b+x)} (N)$$

Fr2 Permitted overhung load(x=L/2)for foot-mounted gear units according to the selection tables in (N)
A,b Gear unit constant for overhung load conversion(mm)
X Distance form the shaft shouldert to the force application point in(mm)
The values of a, b Fr2 are biven in the following tables:

输出轴径向载荷 Out put shafts radial loads

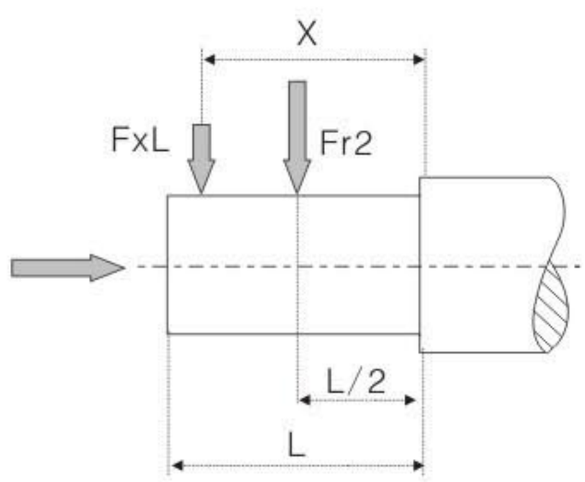

NMRV	025	030	040	050	063	075	090	110	130	150
a	50	65	84	101	120	131	162	176	188	215
b	38	50	64	76	95	101	122	136	148	174
Fr2 max	1350	1830	3490	4840	6270	7380	8180	12000	13500	18000

输入轴径向载荷 INPUT SHAFTS RADIAL LOADS

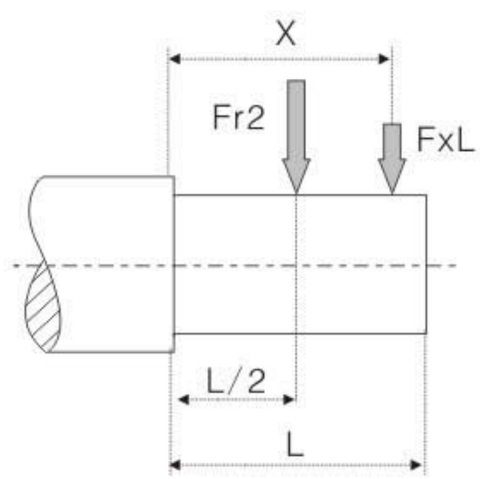

NMRV	030	040	050	063	075	090	110	130	150
a	86	106	129	159	192	227	266	314	350
b	76	94.5	114	139	167	202	236	274	310
Fr_2 max	210	350	490	700	980	1270	1700	2100	2800

3.7选型表注释 / SELECTION TABLES COMMENTS

P_{1n} (kw)	n_2 (r/min)	i	M_{2n} (Nm)	M_{2n} (Nm)	fs		

P1n	输入电机额定功率（kw）;	P1n	Rated power driving motor (kw)
n2	输出转速(r/min);	n2	Output speed (r/min)
M2n	额定输出扭矩(Nm);	M2n	Rated output torque(Nm)
M2 max	最大允许输出扭矩（Nm）;	M2 max	Permissible output torque(Nm)
i	减速器速比;	i	Gear unit ratio
fs	使用系数;	fs	Service factor
	减速器型号;		Gear unit type
	电机型号;		Motor type

3.8选型举例 / SELECTION EXAMPLE

3.8.1 减速电机

例：被驱动设备所需功率0.5KW,n1=1400r/min,均匀冲击负载，启动频率20次/小时，24小时连续运行，环境温度32℃，输出转速n2=93.3r/min，减速电机要求B3安装方位，则：

$$i=\frac{n1}{n2}=\frac{1400}{93.3}=15$$

查P11页啮合参数表，估算当i=15时，ηd=0.82
查图调整使用系数得fs=1.53×1.12=1.714
P1n≥P2/ηd・fs=0.5/0.82×1.714=1.045(kw)
查NMRV系列性能姑数表可确定减速电机型号为：
NMRV075-15-B3-1.1-4
输出扭矩M2计算：

$$M_2=\frac{9550\cdot P2}{n_2}=\frac{9550\times 0.5}{93.3}=51.18(Nm)$$

$$M_{2n}=95\geqslant M_2\cdot f_s=51.18\times 1.714=87.72(Nm)$$

3.8.1 GEAR MOTOR

Example:The input power of driver machine is 0.5kw, n1=1400r/min, uniform, start up frequency 20(1/h),continuous running for 24 hous, the ambient temperature is +32℃,n2=93.3r/min,B3 mounted so:

$$i=\frac{n1}{n2}=\frac{1400}{93.3}=15$$

Check mash table on P11,estimate when the i=15, ηd=0.82
Check and adjust the service factor,will get fs=1.53×1.12=1.714
P1n≥P2/ηd・fs=0.5/0.82×1.714=1.045(kw)
Choose type:
NMRV075-15-B3-1.1-4

$$M_2=\frac{9550\cdot P2}{n_2}=\frac{9550\times 0.5}{93.3}=51.18(Nm)$$

$$M_{2n}=95\geqslant M_2\cdot f_s=51.18\times 1.714=87.72(Nm)$$

3.8.2减速器

例：被驱动设备所需扭矩为300Nm，工作8小时连续运行，均匀冲击负载，启动频率5次/小时，环境温度30℃，即可选用系数fs=1.2×1.1=1.32，减速机输入转速n1=900r/min,输出转速n2=22.5 r/min.

$$M2n\geqslant M2\cdot fs=300\times 1.32=396(Nm)$$

$$i=\frac{n1}{n2}=\frac{900}{22.5}=40$$

查NRV系列性能参数表可确定减速型号为：
NRV090-40

3.8.2 GEAR UNITS

Example:Required torque 300um on driven machine, continuous running for 8 hours,uniform loda,the ambient temperature is 30 ℃, then choose the service factor fs=1.2×1.1=1.32,n1=900r/min, n2=22.5r/min.

$$M2n\geqslant M2\cdot fs=300\times 1.32=396(Nm)$$

$$i=\frac{n1}{n2}=\frac{900}{22.5}=40$$

Choose type:
NRV090-40

3.9 效率与自锁特性 / EFFICIENCY & IRREVERSIBILITY CHARACTER

效率是减速器一个重要参数，效率η的值取决于下列参数1.蜗轮蜗杆的螺旋角；2.输入转速；3.蜗轮蜗杆的磨合时间；4.油品、油封和轴承的性能。在第11页上的啮合参数表列出了动态效率（n1=1400）及静态效率参数。请注意：这些参数是指减速器磨合后性能稳定的计算值。另外，样本中规定的扭矩Mn2也是减速器磨合性能稳定的计算值。上述的实际值可能会有上下偏差。

Efficiency is an important parmeter of reducer,Efficiency η depends on the following parameters:1.helix angle of gearing;2.driving speed;3.running-in of gearing;4.The performance of oil,oil seal and bearing,The mesh date table onpage 11 shows dynamic efficiency (n1=1400)and static efficiency values.Remember that these values are only achieved after the unit has been run in.Torque values Mn2 indicated in the catalogue are calculated by considering the steady-state performance of the gearboxes.The actual values mentioned above may be have deflection.

3.9.1动态自锁

动态自锁是指当马达输入轴突然停止时，输出轴能同步停止。此条件要求动态效率ηd<0.5（参见第11页表格）

3.9.1DYNAMIC IRREVERSIBILITY

Dynamic irreversibility is achieved when the output shaft stops instantly when drive is no longer transmitted through the worm shaft..This condition requires a bynamic efficiency of ηd<0.5（see table on page 11）.

3.9.2静态自锁

静态自锁是指当减速器处于静止状态时，输出轴上的负载不能把蜗轮推动。此条件要求静态效率ηs<0.5（参见第11页表格）

3.9.2 STATIC IRREVERSIBILITY

Static irreversibility is achieved when the gear reducer at a standstill.the application of aload to the output shaft can’t drive the worm shaft.This condition requires a static efficiency of ηd<0.5(see table on page 11)

ηd	>0.6	0.5~0.6	0.4~0.5	<0.4
动态自锁效果	动态不自锁	动态自锁很低	动态自锁良好	动态自锁
DYNAMIC IRREVERSIBILITY	Dynamic reversibility	Low dynamic reversibility	Good dynamic irreversibility	Dynamic irreversibility

ηs	>0.55	0.5~0.55	<0.5
静态自锁效果	静态不自锁	静态自锁很低	静态自锁
STATIC IRREVERSIBILITY	Static reversibility	Low static reversibility	Static irreversibility

上述表格中所有参数只是供大概参考，振动和冲击也会影响减速器的自锁功能。事实上要保证完全自锁是不可能的，我们建议需要时安装外部的安全制动的装置。对于一个组合减速器自锁条件时，必须考虑单减速器的自锁功能效率，因为整体自锁功能是：ηtot=η1×η2。

The table shows approximate irreversibility classes.Vibrations and shocks can affect a gear reducer’s irreversibility.As it is virtually impossible to provide and guarantee total non reversing,we recommend the use of an external brake with sufficient capability to prevent vibrations in duced starting,where these circumstances are required.For the irreversibility conditions of a combined geared unit one must consider that the efficiency of the group is given by the product of the efficiencies of each single reducer,i.e ηtot=η1×η2。

4.NMRV结构分解图 NMRV STRUCTURE DIAGRAM

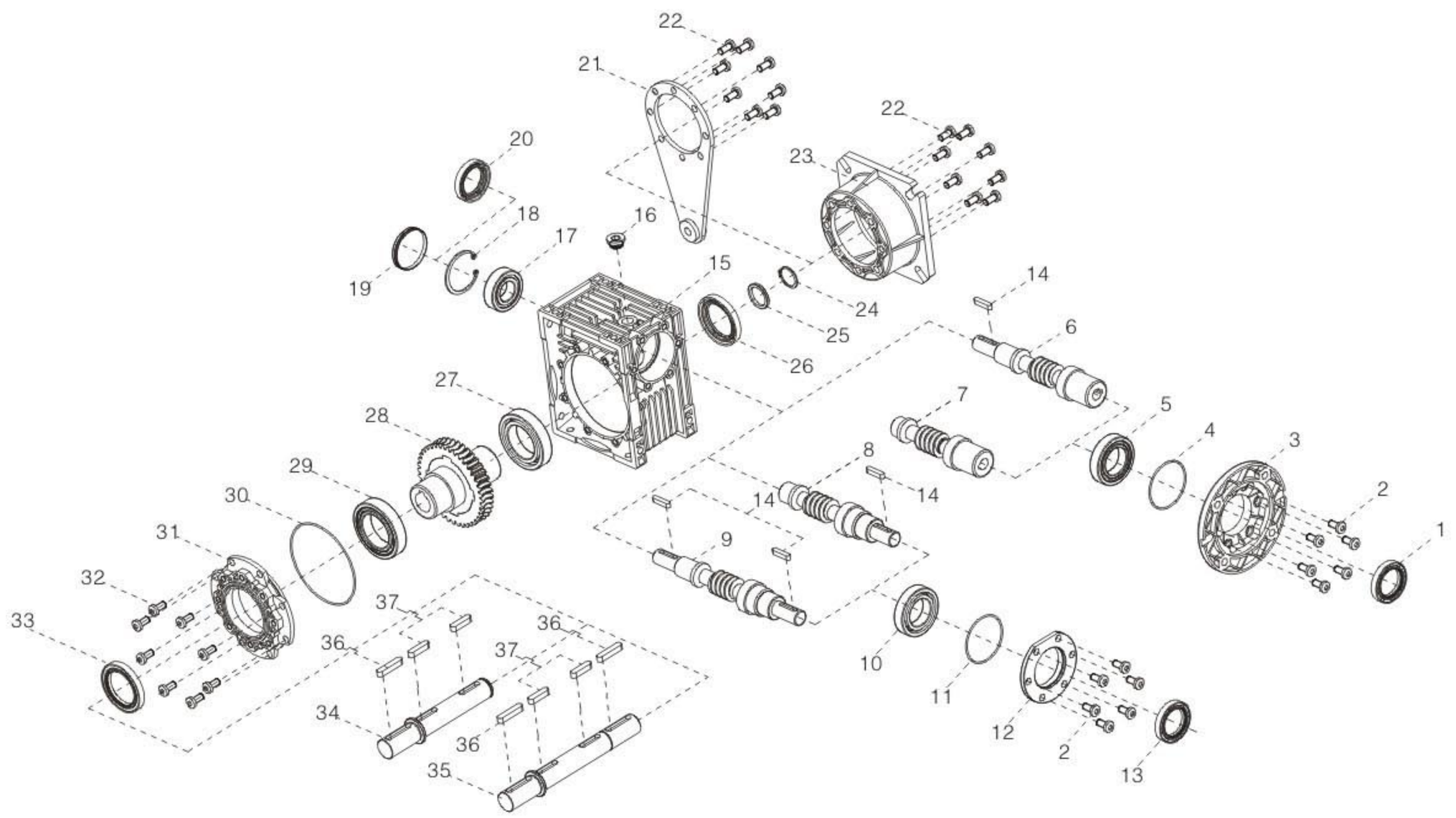

1	油封 (oil seal)	11	O型橡胶密封圈 (O-ring)	21	扭力臂 (Torque arm)	31	输出端盖 (Bearing support cover)
2	内六角圆柱头螺栓 (Hexgon socket head cap screw)	12	轴承座 (Bearing block)	22	内六角圆柱头螺栓 (Hexgon socket head cap screw)	32	内六角圆柱头螺栓 (Hexgon socket head cap screw)
3	电机法兰 (Flange PAM)	13	油封 (oil seal)	23	输出法兰 (OutPUt flange)	33	油封 (oil seal)
4	O型橡胶密封圈 (O-ring)	14	平键 (Parallel key)	24	轴用弹性挡圈 (Circlip for shaft)	34	单向输出轴 (Single output shaft)
5	轴承 (Bearing)	15	箱体 (Cablint)	25	挡圈 (Washer)	35	双向输出轴 (Double output shaft)
6	孔输入轴输入蜗杆 (Double ext.RV Worm)	16	油塞 (Plug cock)	26	油封 (oil seal)	36	平键 (Parallel key)
7	孔输入蜗杆 (PAM worm)	17	轴承 (Bearing)	27	轴承 (Bearing)	37	平键 (Parallel key)
8	孔输入蜗杆 (PAM worm)	18	孔用弹性挡圈 (Circlip for hole)	28	蜗轮 (Worm wheel)		
9	双轴输入蜗杆 (Double ext.RV worm)	19	平面油封 (oil seal)	29	轴承 (Bearing)		
10	轴承 (Bearing)	20	油封 (oil seal)	30	O型橡胶密封圈 (O-ring)		

8.减速器选型表 /GEAR UNIT SELECTION TABLES

8.1NMRV...IEC...性能参数 PERFORMANCE PARAMETER

P_{1n} (kw)	n_2 (r/min)	i	M_{2n} (Nm)	F_{r2} (N)	fs			
0.06	280	5	1.8	439	6.2	NMRV025	56B14	5614
	186.7	7.5	2.6	503	4.2			
	140	10	3.4	553	3.5			
	93.3	15	4.9	633	2.5			
	70	20	6.2	697	1.9			
	46.7	30	8.3	798	1.6			
	35	40	10	878	1.2			
	28	50	12	946	0.9			
	23.3	60	14	1006	0.7			
	186.7	7.5	2.6	683	7.0	NMRV030	56B5/B14	5614
	140	10	3.4	752	5.4			
	93.3	15	4.7	861	3.9			
	70	20	6	948	3.1			
	56	25	7	1021	3.1			
	46.7	30	8	1085	2.5			
	35	40	9.7	1194	1.9			
	28	50	11	1286	1.5			
	23.3	60	13	1367	1.3			
	17.5	80	14	1504	0.9			
0.09	373.3	7.5	2.0	399	3.9	NMRV025	56B14	5612
	280	10	2.6	439	3.4			
	186.7	15	3.8	503	2.4			
	140	20	4.9	533	1.8			
	93.3	30	6.7	633	1.3			
	70	40	8.5	697	1.1			
	56	50	10	751	0.9			
	186.7	7.5	3.9	503	2.8	NMRV025	56B14	5624
	140	10	5.1	553	2.4			
	93.3	15	7.3	633	1.6			
	70	20	9.3	697	1.3			
	46.7	30	13	798	1.0			
	35	40	16	878	0.8			
	373.3	7.5	20	542	6.5	NMRV030	56B5/B14	5612
	280	10	2.6	597	5.0			
	186.7	15	3.7	683	3.5			
	140	20	4.7	752	2.5			
	112	25	5.5	810	2.9			
	93.3	30	6.4	861	2.3			
	70	40	8.0	948	1.8			
	56	50	9.4	1021	1.4			
	46.7	60	10	1085	1.1			
	35	80	13	1194	0.9			

P_{1n} (kw)	n_2 (r/min)	i	M_{2n} (Nm)	F_{r2} (N)	fs			
0.09	186.7	7.5	3.9	683	4.7	NMRV030	56B5/B14	5624
	140	10	5.0	752	3.6			
	93.3	15	7.0	861	2.6			
	70	20	8.8	948	2.0			
	56	25	10	1021	2.1			
	46.7	30	12	1085	1.7			
	35	40	14	1194	1.2			
	28	50	17	1286	1.0			
	23.3	60	18	1367	0.9			
	28	50	19	2475	2.1	NMRV040	56B5	5624
	23.3	60	21	2630	1.7			
	17.5	80	25	2895	1.3			
	14	100	29	3118	1.0			
0.12	373.3	7.5	2.7	399	3.0	NMRV025	56B14	5622
	280	10	3.5	439	2.6			
	186.7	15	5.1	503	1.8			
	140	20	6.5	553	1.4			
	93.3	30	9.0	633	1.0			
	70	40	11	697	0.8			
	186.7	7.5	5.2	683	3.5	NMRV030	63B5/B14	6314
	140	10	6.6	752	2.7			
	93.3	15	9.3	861	1.9			
	70	20	12	948	1.5			
	56	25	14	1021	1.6			
	46.7	30	16	1085	1.3			
	35	40	19	1194	0.9			
	28	50	22	1286	0.8			
	46.7	30	17	2087	2.7	NMRV040	63B5/B14	6314
	35	40	21	2298	1.9			
	28	50	25	2475	1.6			
	23.3	60	28	2630	1.3			
	17.5	80	33	2895	1.0			
	14	100	38	3118	0.8			
	23.3	60	29	3610	2.3	NMRV050	63B5	6314
	17.5	80	35	3973	1.9			
	14	100	39	4280	1.4			
0.18	373.3	7.5	4.0	542	3.2	NMRV030	63B5/B14	6312
	280	10	5.2	597	2.5			
	186.7	15	7.4	683	1.8			
	140	20	9.5	752	1.3			
	112	25	11	810	1.4			
	93.3	30	13	861	1.2			
	70	40	16	948	0.9			
	186.7	7.5	7.7	683	2.3	NMRV030	63B5/B14	6324
	140	10	10	752	1.8			
	93.3	15	14	861	1.3			
	70	20	18	948	1.0			
	56	25	20	1021	1.0			
	46.7	30	24	1085	0.8			

P_{1n} (kw)	n_2 (r/min)	i	M_{2n} (Nm)	F_{r2} (N)	fs		
0.18	93.3	30	14	1657	2.5	NMRV040 63B5/B14	6312
	70	40	17	1824	1.8		
	56	50	21	1964	1.4		
	70	20	19	1824	2.1	NMRV040 63B5/B14	6324
	56	25	23	1964	1.7		
	46.7	30	25	2087	1.8		
	35	40	32	2298	1.3		
	28	50	37	2475	1.0		
	23.3	60	42	2630	0.9		
	45	20	28	2113	1.6	NMRV040 71B5/B14	7116
	36	25	34	2276	1.3		
	30	30	38	2419	1.3		
	22.5	40	47	2662	1.0		
	46.7	60	24	2865	2.1	NMRV050 63B5	6312
	35	80	30	3153	1.5		
	28	100	34	3397	1.2		
	35	40	33	3153	2.3	NMRV050 63B5	6324
	28	50	39	3397	1.9		
	23.3	60	43	3610	1.6		
	17.5	80	52	3973	1.2		
	14	100	59	4280	0.9		
	18	50	56	3936	1.4	NMRV050 71B5/B14	7116
	15	60	63	4183	1.1		
	11.3	80	75	4604	0.9		
	15	60	66	5467	2.1	NMRV063 71B5/B14	7116
	11.3	80	79	6018	1.6		
	9	100	90	6270	1.4		
0.25	373.3	7.5	5.6	542	2.3	NMRV030 63B5/B14	6322
	280	10	7.2	597	1.8		
	186.7	15	10	683	1.3		
	140	20	13	752	0.9		
	112	25	15	810	1.0		
	93.3	30	18	861	0.8		
	186.7	7.5	11	1315	3.6	NMRV040 71B5/B14	7114
	140	10	14	1447	2.8		
	93.3	15	20	1657	2.0		
	70	20	26	1824	1.5		
	56	25	32	1964	1.2		
	46.7	30	35	2087	1.3		
	35	40	44	2298	0.9		
	120	7.5	17	1524	2.6	NMRV040 71B5/B14	7126
	90	10	22	1677	2.0		
	60	15	31	1920	1.4		
	45	20	39	2113	1.1		
	36	25	48	2276	0.9		
	30	30	53	2419	0.9		

P_{1n} (kw)	n_2 (r/min)	i	M_{2n} (Nm)	F_{r2} (N)	fs			
0.25	35	80	42	3153	1.1	NMRV050	63B5/B14	6322
	28	100	48	3397	0.8			
	70	20	27	2503	2.7	NMRV050	71B5/B14	7144
	56	25	32	2696	2.2			
	46.7	30	36	2865	2.3			
	35	40	46	3153	1.7			
	28	50	54	3397	1.4			
	23.3	60	60	3610	1.1			
	17.5	80	72	3973	0.9			
	45	20	40	2900	1.9	NMRV050	71B5/B14	7126
	36	25	48	3124	1.5			
	30	30	54	3320	1.7			
	22.5	40	67	3654	1.2			
	18	50	78	3936	1.0			
	15	60	88	4183	0.8			
	28	50	55	4440	2.4	NMRV063	71B5/B14	7114
	23.3	60	63	4719	2.0			
	17.5	80	76	5193	1.6			
	14	100	87	5595	1.4			
	18	50	81	5145	1.8	NMRV063	71B5/B14	7126
	15	60	92	5467	1.5			
	11.3	80	110	6018	1.2			
	9	100	125	6270	1.0			
	17.5	80	80	6130	2.4	NMRV075	71B5	7114
	14	100	94	6603	1.9			
	11.3	80	117	7103	1.7	NMRV075	71B5	7126
	9	100	133	7380	1.4			
0.37	373.3	7.5	8.3	1044	3.4	NMRV040	71B5/B14	7112
	280	10	11	1149	2.6			
	186.7	15	16	1315	1.9			
	140	20	20	1447	1.4			
	112	25	25	1559	1.1			
	186.7	7.5	16	1315	2.5	NMRV040	71B5/B14	7124
	140	10	21	1447	1.9			
	93.3	15	30	1657	1.3			
	70	20	39	1824	1.0			
	56	25	47	1964	0.8			
	46.7	30	52	2087	0.9			
	112	25	25	2140	2.0	NMRV050	71B5/B14	7112
	93.3	30	29	2274	2.2			
	70	40	37	2503	1.6			
	56	50	44	2696	1.2			
	46.7	60	50	2865	1.0			
	35	80	62	3153	0.7			
	140	10	21	1987	3.4	NMRV050	71B5/B14	7124
	93.3	15	31	2274	2.4			
	70	20	39	2503	1.9			

P_{1n} (kw)	n_2 (r/min)	i	M_{2n} (Nm)	F_{r2} (N)	fs			
0.37	56	25	47	2696	1.5	NMRV050	71B5/B14	7124
	46.7	30	54	2865	1.6			
	35	40	68	3153	1.1			
	28	50	80	3397	0.9			
	23.3	7.5	89	3610	0.8			
	120	60	25	2091	3.4	NMRV050	80B5/B14	8016
	90	10	33	2302	2.6			
	60	15	47	2635	1.8			
	45	20	59	2900	1.3			
	36	25	72	3124	1.0			
	30	30	80	3320	1.1			
	35	40	70	4122	2.1	NMRV063	71B5/B14	7124
	28	50	82	4440	1.6			
	23.3	60	94	4719	1.4			
	17.5	80	113	5193	1.1			
	14	100	129	5595	0.9			
	45	20	60	3797	2.4	NMRV063	80B5/B14	8016
	36	25	73	4084	1.9			
	30	30	82	4339	2.1			
	22.5	40	102	4776	1.6			
	18	50	120	5145	1.2			
	15	60	137	5467	1.0			
	23.3	60	97	5569	2.1	NMRV075	71B5	7124
	17.5	80	119	6130	1.6			
	14	100	139	6603	1.3			
	18	50	124	6073	1.8	NMRV075	80B5/B14	8016
	15	60	141	6453	1.5			
	11.3	80	173	7103	1.2			
	9	100	196	7380	1.0			
	11.3	80	185	7859	1.7	NMRV090	80B5/B14	8016
	9	100	212	8180	1.3			
0.55	373.3	7.5	12	1044	2.3	NMRV040	71B5/B14	7122
	280	10	16	1149	1.8			
	186.7	15	24	1315	1.3			
	140	20	30	1447	1.0			
	112	25	37	1559	0.8			
	140	20	31	1987	1.7	NMRV050	71B5/B14	7122
	112	25	38	2140	1.4			
	93.3	30	43	2274	1.5			
	70	40	55	2503	1.1			
	56	50	65	2696	0.8			
	46.7	60	74	2865	0.7			
	186.7	7.5	24	1805	2.9	NMRV050	80B5/B14	8014
	140	10	32	1987	2.3			
	93.3	15	46	2274	1.6			
	70	20	59	2503	1.2			
	56	25	70	2696	1.0			
	46.7	30	80	2865	1.1			

P_{1n} (kw)	n_2 (r/min)	i	M_{2n} (Nm)	F_{r2} (N)	fs			
0.55	120	7.5	37	2091	2.3	NMRV050	80B5/B14	8026
	90	10	48	2302	1.7			
	60	15	69	2635	1.2			
	45	20	88	2900	0.9			
	70	40	56	3272	1.9			
	56	50	68	3524	1.5			
	46.7	60	78	3745	1.2	NMRV063	71B5/B14	7122
	35	80	96	4122	0.9			
	28	100	111	4440	0.7			
	70	20	60	3272	2.2	NMRV063	80B5/B14	8014
	56	25	72	3524	1.8			
	46.7	30	82	3745	1.9			
	35	40	104	4122	1.4			
	28	50	122	4440	1.1			
	23.3	60	140	4719	0.9			
	60	15	70	3444	2.2	NMRV063	80B5/B14	8026
	45	20	90	3791	1.6			
	36	25	108	4084	1.3			
	30	30	123	4339	1.4			
	22.5	40	152	4776	1.1			
	35	80	99	4865	1.3	NMRV075	71B5	7122
	28	100	116	5241	1.0			
	35	40	108	4865	2.0	NMRV075	80B5/B14	8014
	28	50	128	5241	1.6			
	23.3	60	144	5569	1.4			
	17.5	80	177	6130	1.1			
	14	100	206	6603	0.9			
	30	30	124	5122	2.1	NMRV075	80B5/B14	8026
	22.5	40	156	5637	1.5			
	18	50	184	6073	1.2			
	15	60	210	6453	1.0			
	17.5	80	189	6783	1.5	NMRV090	80B5/B14	8014
	14	100	221	7306	1.2			
	18	50	196	6719	2.0	NMRV090	80B5/B14	8026
	15	60	224	7140	1.6			
	11.3	80	275	7859	1.1			
	9	100	315	8180	0.9			
	17.5	80	201	8571	2.6	NMRV110	80B5	8014
	14	100	236	9232	2.0			
	11.3	80	294	9931	1.9	NMRV110	80B5	8026
	9	100	344	10320	1.5			

P_{1n} (kw)	n_2 (r/min)	i	M_{2n} (Nm)	F_{r2} (N)	fs			
0.75	373.3	7.5	17	1433	3.0	NMRV050	80B5/B14	8012
	280	10	22	1577	2.4			
	186.7	15	31	1805	1.7			
	140	20	41	1987	1.3			
	112	25	49	2140	1.0			
	93.3	30	56	2274	1.1			
	186.7	7.5	33	1805	2.1	NMRV050	80B5/B14	8024
	140	10	43	1987	1.7			
	93.3	15	62	2274	1.2			
	70	20	80	2503	0.9			
	140	20	43	2597	2.3	NMRV063	80B5/B14	8012
	112	25	52	2797	1.8			
	93.3	30	60	2973	2.0			
	70	40	77	3272	1.4			
	56	50	92	3524	1.1			
	46.7	60	106	3745	0.9			
	93.3	15	63	2973	2.2	NMRV063	80B5/B14	8024
	70	20	82	3272	1.6			
	56	25	98	3524	1.3			
	46.7	30	112	3745	1.4			
	35	40	141	4122	1.0			
	120	7.5	51	2734	2.9	NMRV063	90B5/B14	90S6
	90	10	57	3009	2.3			
	60	15	96	3444	1.6			
	45	20	123	3791	1.2			
	36	25	147	4084	0.9			
	30	30	167	4339	1.0			
	46.7	60	107	4421	1.3	NMRV075	80B5/B14	8012
	35	80	135	4865	1.0			
	28	100	159	5241	0.8			
	56	25	101	4160	2.0	NMRV075	80B5/B14	8024
	46.7	30	117	4421	2.0			
	35	40	147	4865	1.5			
	28	50	174	5241	1.2			
	23.3	60	196	5569	1.0			
	60	15	97	4065	2.4	NMRV075	90B5/B14	90S6
	45	20	124	4474	1.9			
	36	25	149	4820	1.4			
	30	30	170	5122	1.5			
	22.5	40	213	5637	1.1			
	35	80	143	5383	1.6	NMRV090	80B5/B14	8012
	28	100	169	5799	1.2			
	28	50	182	5799	1.9	NMRV090	80B5/B14	8024
	23.3	60	209	6163	1.5			
	17.5	80	258	6783	1.1			
	14	100	302	7306	0.9			

P_{1n} (kw)	n_2 (r/min)	i	M_{2n} (Nm)	F_{r2} (N)	fs			
0.75	30	30	179	5667	2.6	NMRV090	90B5B14	90S6
	22.5	40	226	6238	1.8			
	18	50	267	6719	1.5			
	15	60	306	7140	1.1			
	17.5	80	274	8571	1.9	NMRV110	80B5	8024
	14	100	322	9232	1.5			
	15	60	325	9023	2.1	NMRV110	90B5	90S6
	11.3	80	401	9931	1.4			
	9	100	470	10320	1.1			
	11.3	80	401	12989	2.1	NMRV130	90B5	90S6
	9	100	470	13500	1.7			
1. 1	373.3	7.5	25	1433	2.1	NMRV050	80B5/B14	8022
	280	10	33	1577	1.7			
	186.7	15	48	1805	1.2			
	140	20	62	1987	0.9			
	186.7	15	46	2359	2.1	NMRV063	80B5/B14	8022
	140	20	60	2597	1.6			
	112	25	72	2797	1.2			
	93.3	30	82	2973	1.4			
	70	40	104	3272	1.0			
	120	7.5	75	2734	2.0	NMRV063	90B5/B14	90L6
	90	10	98	3009	1.6			
	60	15	140	3444	1.1			
	45	20	180	3791	0.8			
	186.7	7.5	50	2359	2.6	NMRV063	90B5/B14	90S4
	140	10	65	2597	2.0			
	93.3	15	92	2973	1.5			
	70	20	120	3272	1.1			
	56	25	144	3524	0.9			
	46.7	30	164	3745	1.0			
	112	25	77	3302	2.0	NMRV075	80B5/B14	8022
	93.3	30	89	3509	1.9			
	70	40	114	3862	1.4			
	56	50	137	4160	1.1			
	46.7	60	158	4421	0.9			
	90	10	98	3551	2.3	NMRV075	90B5/B14	90L6
	60	15	142	4065	1.7			
	45	20	182	4474	1.3			
	36	25	219	4820	1.0			
	30	30	249	5122	1.0			

P_{1n} (kw)	n_2 (r/min)	i	M_{2n} (Nm)	F_{r2} (N)	fs			
1.1	93.3	15	95	3509	2.1	NMRV075	90B5/B14	90S4
	70	20	122	3862	1.7			
	56	25	148	4160	1.3			
	46.7	30	171	4421	1.3			
	35	40	216	4865	1.0			
	35	80	210	5383	1.1	NMRV090	80B5/B14	8022
	28	100	248	5799	0.8			
	36	25	228	5333	1.6	NMRV090	90B5/B14	90L6
	30	30	263	5667	1.8			
	22.5	40	331	6238	1.2			
	18	50	391	6719	1.0			
	15	60	448	7140	0.8			
	35	40	222	5383	1.6	NMRV090	90B5/B14	90S4
	28	50	266	5799	1.3			
	23.3	60	306	6163	1.0			
	22.5	40	345	7882	2.3	NMRV110	90B5	90L6
	18	50	414	8491	1.8			
	15	60	476	9023	1.4			
	11.3	80	588	9931	1.0			
	28	50	278	7328	2.4	NMRV110	90B5	90S4
	23.3	60	324	7787	1.9			
	17.5	80	402	8571	1.3			
	14	100	473	9232	1.0			
	11.3	80	588	12989	1.5	NMRV130	90B5	90L6
	9	100	689	13500	1.1			
	17.5	80	408	11210	2.1	NMRV130	90B5	90S4
	14	100	480	12076	1.5			
1.5	373.3	7.5	34	1433	1. 5	NMRV050	80B5/B14	8032
	280	10	45	1577	1.2			
	186.7	15	65	1805	0.9			
	186.7	7.5	68	2359	1.9	NMRV063	90B5/B14	90L4
	140	10	88	2597	1.5			
	93.3	15	126	2973	1.1			
	70	20	164	3272	0.8			
	373.3	7.5	35	1873	2.7	NMRV063	90B5/B14	90S2
	280	10	45	2061	2.2			
	186.7	15	66	2359	1.6	NMRV063	90B5/B14	90S2
	140	20	86	2597	1.2			
	112	25	105	2797	0.9			
	93.3	30	120	2973	1.0			
	120	7.5	103	3227	2.1	NMRV075	100B5/B14	100L6
	90	10	134	3551	1.7			
	60	15	193	4065	1.2			
	56	50	187	4160	1.3	NMRV075	90B5/B14	90S2
	46.7	60	215	4421	1.1			
	140	10	89	3065	2.2	NMRV075	90B5/B14	90L4
	93.3	15	129	3509	1.6			
	70	20	166	3862	1.3			
	56	25	202	4160	1.0			

P_{1n} (kw)	n_2 (r/min)	i	M_{2n} (Nm)	F_{r2} (N)	fs			
1.5	46.7	30	233	4421	1.0			
	280	10	45	2433	3.2	NMRV075	90B5/B14	90S2
	186.7	15	66	2785	2.3			
	140	20	86	3065	1.9			
	112	25	105	3302	1.4			
	93.3	30	121	3509	1.4			
	70	40	156	3862	1.1			
	90	10	137	3929	2.7	NMRV090	100B5/B14	100L6
	60	15	198	4498	2.1			
	45	20	258	4951	1.5			
	36	25	310	5333	1.2			
	30	30	358	5667	1.3			
	70	20	170	4273	2.1	NMRV090	100B5/B14	90L4
	56	25	207	4603	1.6			
	46.7	30	239	4891	1.7			
	35	40	303	5383	1.2			
	28	50	363	5799	0.9			
	23.3	60	417	6163	0.8			
	56	50	197	4603	1.3	NMRV090	90B5/B14	90S2
	46.7	60	227	4891	1.1			
	45	20	264	6256	2.7	NMRV110	100B5	100L6
	36	25	322	6739	2.4			
	30	30	363	7161	2.3			
	22.5	40	471	7882	1.7			
	18	50	565	8491	1.3			
	15	60	649	9023	1.1			
	35	40	315	6803	2.2	NMRV110	90B5	90L4
	28	50	379	7328	1.7			
	23.3	60	442	7787	1.4			
	17.5	80	548	8571	0.9			
	46.7	60	236	6181	2.0	NMRV110	90B5	90S2
	35	80	299	6803	1.3			
	28	100	358	7328	1.0			
	22.5	40	471	10309	2.3	NMRV130	100B5	100L6
	18	50	565	11105	1.9			
	15	60	659	11801	1.4			
	11.3	80	802	12989	1.1			
	17.5	80	557	11210	1.5	NMRV130	90B5	90L4
	14	100	655	12076	1.1			
2. 2	373.3	7.5	51	1873	1.8	NMRV063	90B5/B14	90L2
	280	10	66	2061	1.5			
	186.7	15	97	2359	1.1			
	186.7	7.5	99	2785	1.9	NMRV075	90B5/B14	100L1-4
	140	10	131	3065	1.5			
	93.3	15	189	3509	1.1			
	373.3	7.5	50	2210	2.6	NMRV075	100B5/B14	90L2
	280	10	66	2433	2.2			
	186.7	15	97	2785	1.5			
	140	20	126	3065	1.3			

P_{1n} (kw)	n_2 (r/min)	i	M_{2n} (Nm)	F_{r2} (N)	fs			
2. 2	112	25	154	3302	1.0	NMRV075	100B5/B14	90L2
	93.3	30	178	3509	1.0			
	186.7	7.5	100	3081	2.9	NMRV090	90B5/B14	100L1-4
	140	10	132	3391	2.3			
	93.3	15	191	3882	1.9			
	70	20	249	4273	1.4			
	56	25	304	4603	1.1			
	46.7	30	351	4891	1.2			
	120	7.5	154	3570	2.2	NMRV090	112B5/B14	112M6
	90	10	201	3929	1.8			
	60	15	291	4498	1.4			
	45	20	378	4951	1.0			
	140	20	129	3391	2.0	NMRV090	90B5/B14	90L2
	112	25	159	3653	1.6			
	93.3	30	185	3882	1.7			
	70	40	237	4273	1.2			
	56	50	289	4603	0.9			
	70	20	255	5399	2.5	NMRV110	100B5	100L1-4
	56	25	311	5816	2.2			
	46.7	30	356	6181	2.0			
	35	40	462	6803	1.5			
	28	50	555	7328	1.2			
	23.3	60	648	7787	1.0			
	90	10	203	4965	3.5	NMRV110	112B5	112M6
	60	15	294	5684	2.6			
	45	20	388	6256	1.9			
	36	25	473	6739	1.6			
	30	30	532	7161	1.6			
	112	25	161	4616	3.1	NMRV110	90B5	90L2
	93.3	30	187	4905	3.0			
	70	40	243	5399	2.2			
	56	50	296	5816	1.7			
	46.7	60	347	6181	1.4			
	35	40	468	8897	2.2	NMRV130	100B5	100L1-4
	28	50	563	9584	1.7			
	23.3	60	657	10185	1.4			
	17.5	80	816	11210	1.0			
	36	25	473	8814	2.2	NMRV130	112B5	112M6
	30	30	539	9366	2.2			
	22.5	40	691	10309	1.6			
	18	50	829	11105	1.3			
	15	60	966	11801	1.0			
	35	80	444	8897	1.3	NMRV130	90B5	90L2
	28	100	525	9584	1.0			
	28	50	570	13103	2.5	NMRV150	100B5	100L1-4
	23.3	60	657	13924	1.9			
	17.5	80	816	15325	1.4			
	14	100	960	16508	1.0			

P_{1n} (kw)	n_2 (r/min)	i	M_{2n} (Nm)	F_{r2} (Nm)	fs			
3. 0	373.3	7.5	68	2210	1.9	NMRV075	100B5/B14	100L2
	280	10	90	2433	1.6			
	186.7	7.5	135	2785	1.4	NMRV075	100B5/B14	100L2-4
	140	10	178	3065	1.1			
	93.3	15	258	3509	0.8			
	373.3	7.5	70	2446	3.0	NMRV090	100B5/B14	100L2-4
	280	10	92	2692	2.6			
	186.7	7.5	137	3081	2.1	NMRV090	100B5/B14	100L2-4
	140	10	180	3391	1.7			
	93.3	15	261	3882	1.4			
	70	20	340	4273	1.0			
	56	25	414	4603	0.8			
	46.7	30	479	4891	0.9			
	93.3	15	264	4905	2.5	NMRV110	100B5	100L2-4
	70	20	348	5399	1.9			
	56	25	425	5816	1.6			
	46.7	30	485	6181	1.5			
	35	40	630	6803	1.1			
	28	50	757	7328	0.9			
	120	7.5	210	4511	3.1	NMRV110	132B5	132S6
	90	10	277	4965	2.6			
	60	15	401	5684	1.9			
	45	20	528	6256	1.4			
	56	25	430	7607	2.2	NMRV130	100B5	100L2-4
	46.7	30	491	8084	2.1			
	35	40	638	8897	1.6			
	28	50	767	9584	1.3			
	23.3	60	896	10185	1.0			
	17.5	80	1113	11210	0.8			
	90	10	277	6494	3.5	NMRV130	132B5	132S6
	60	15	406	7434	2.6			
	45	20	528	8182	2.0			
	36	25	645	8814	1.6			
	30	30	735	9366	1.6			
	22.5	40	942	10309	1.2			
	28	50	778	13103	1.8	NMRV150	100B5	100L2-4
	23.3	60	896	13924	1.4			
	17.5	80	1113	15325	1.0			
	14.0	100	1310	16508	0.8			
4. 0	373.3	7.5	91	2210	1.4	NMRV075	112B5/B14	112M2
	280	10	120	2433	1.2			
	186.7	7.5	180	2785	1.0	NMRV075	112B5/B14	112M4
	140	10	237	3065	0.8			
	373.3	7.5	93	2446	2.3	NMRV090	112B5/B14	112M2
	280	10	123	2692	1.9			
	186.7	7.5	182	3081	1.6	NMRV090	112B5	112M4
	140	10	240	3391	1.3			
	93.3	15	348	3882	1.0			
	70	20	453	4273	0.8			

P_{1n} (kw)	n_2 (r/min)	i	M_{2n} (Nm)	F_{r2} (N)	fs			
4. 0	140	10	240	4285	2.5	NMRV110	112B5	112M4
	93.3	15	352	4905	1.9			
	70	20	464	5399	1.4			
	56	25	566	5816	1.2			
	46.7	30	647	6181	1.1			
	120	7.5	280	4511	2.3	NMRV110	132B5	132M1-6
	90	10	369	4965	1.9			
	60	15	535	5684	1.4			
	56	25	573	7607	1.6	NMRV130	112B5	112M4
	46.7	30	655	8084	1.6			
	35	40	851	8897	1.2			
	28	50	1023	9584	1.0			
	23.3	60	1195	10185	0.8			
	120	7.5	283	5901	3.1	NMRV130	132B5	132M1-6
	90	10	369	6494	2.6			
	60	15	541	7434	2.0			
	45	20	705	8182	1.5			
	36	25	860	8814	1.2			
	28	50	1037	13103	1.4	NMRV150	112B5	112M4
	23.3	60	1195	13924	1.1			
	17.5	80	1484	15325	0.8			
5. 5	186.7	7.5	250	3893	2.2	NMRV110	132B5	132S4
	140	10	330	4285	1.8			
	93.3	15	484	4905	1.4			
	70	20	638	5399	1.0			
	140	10	334	5605	2.5	NMRV130	132B5	132S4
	93.3	15	490	6416	1.9			
	70	20	638	7062	1.4			
	56	25	788	7607	1.2			
	46.7	30	900	8084	1.2			
	35	40	1171	8897	0.9			
	70	20	645	9654	2.0	NMRV150	132B5	132S4
	56	25	788	10400	1.5			
	46.7	30	934	11051	1.3			
	35.0	40	1171	12163	1.3			
	28.0	50	1426	13103	1.0			
	23.3	60	1643	13924	0.8			
7.5	186.7	7.5	341	3893	1.6	NMRV110	132B5	132M4
	140	10	450	4285	1.3			
	93.3	15	660	4905	1.0			
	186.7	7.5	345	5092	2.2	NMRV130	132B5	132M4
	140	10	455	5605	1.8			
	93.3	15	668	6416	1.4			
	70	20	870	7062	1.0			
	56	25	1074	7607	0.9			
	46.7	30	1228	8084	0.8			
	35	40	1596	8897	0.7			
	70	20	880	9654	1.5	NMRV150	132B5	132M4
	56	25	1074	10400	1.1			

P_{1n} (kw)	n_2 (r/min)	i	M_{2n} (Nm)	F_{r2} (N)	fs			
7.5	46.7	30	1274	11051	0.9	NMRV150	132B5	132M4
	35	40	1596	12163	1.0			
11	186.7	7.5	512	6962	2.3	NMRV150	160B5	160M4
	140	10	675	7663	1.8			
	93.3	15	990	8771	1.3			
	70.0	20	1291	9654	1.0			
	56.0	25	1576	10400	0.8			
15	186.7	7.5	698	6962	1.7	NMRV150	160B5	160L4
	140	10	921	7663	1.3			
	93.3	15	1351	8771	0.9			
	70.0	20	1760	9654	0.7			

8.2DRV性能参数 PERFORMANCE PARAMETERS

P_{1n} (kw)	n_2 (r/min)	i	M_{2n} (Nm)	F_{r2} (N)	fs		
0.09	28.0	100	18	1286	1.6	DRV025/030	5612
	18.7	150	25	1472	1.1		
	14.0	200	31	1620	0.9		
	14.0	100	37	1620	0.8	DRV025/030	5624
	9.3	150	50	1830	0.6		
	7.0	200	61	1830	0.5		
	5.6	250	68	1830	0.5		
	4.7	300	77	1830	0.4		
	3.5	400	106	1830	0.3		
	2.8	500	117	1830	0.3		
	2.3	600	135	1830	0.2		
	1.9	750	149	1830	0.2		
	1.6	900	167	1830	0.2		
	1.2	1200	201	1830	0.1		
	0.9	1500	231	1830	0.1		
	0.8	1800	264	1830	0.1		
	0.6	2400	311	1830	0.1		
	0.5	3000	347	1830	0.1		
	9.3	300	43	3490	1.6	DRV025/040	5612
	7.0	400	52	3490	1.2		
	5.6	500	71	3490	0.8		
	4.7	300	82	3490	0.8	DRV030/040	5624
	3.5	400	103	4840	1.2	DRV030/050	5624
	2.8	500	120	4840	1.0		
	2.3	600	146	4840	0.9		
	1.9	750	158	4840	0.8		
	1.6	900	177	4840	0.7		
	1.6	900	188	6270	1.0	DRV030/063	5624
	1.2	1200	222	6270	0.9		
	0.9	1500	259	6270	0.7		
	0.9	1500	305	7380	1.1	DRV040/075	5624
	0.8	1800	331	7380	1.0		
	0.6	2400	400	7380	0.7		
	0.5	3000	494	8180	0.9	DRV040/090	5624
	0.4	4000	589	8180	0.8		

P_{1n} (kw)	n_2 (r/min)	i	M_{2n} (Nm)	F_{r2} (N)	fs		
0.12	4.7	300	112	4840	1.2	DRV030/050	6314
	3.5	400	138	4840	0.9		
	2.8	500	160	4840	0.7		
	2.8	500	168	6270	1.3	DRV030/063	6314
	2.3	600	199	6270	1.1		
	1.9	750	217	6270	0.9		
	1.6	900	279	7380	1.2	DRV040/075	6314
	1.2	1200	344	7380	0.9		
	0.8	1800	470	8180	0.9	DRV040/090	6314
	0.6	2400	593	8180	0.9		
	0.5	3000	731	10320	1.2	DRV050/110	6314
	0.4	4000	884	10320	1.0		
	0.3	5000	1023	10320	0.8		
0.18	3.5	400	216	6270	1.0	DRV030/063	6324
	2.8	500	252	6270	0.8		
	2.3	600	336	7380	1.1	DRV040/075	6324
	1.9	750	371	7380	0.9		
	1.6	900	419	7380	0.8		
	1.2	1200	544	8180	1.0	DRV040/090	6324
	0.9	1500	647	8180	0.8		
	0.8	1800	727	10320	1.5	DRV050/110	6324
	0.6	2400	948	10320	1.1		
0.25	7.0	400	150	6270	1.4	DRV030/063	6322
	5.6	500	175	6270	1.2		
	3.5	400	321	7380	1.1	DRV040/075	7114
	2.8	500	375	7380	0.8		
	2.3	600	488	8180	1.2	DRV040/090	7114
	1.9	750	553	8180	0.9		
	1.6	900	612	8180	0.8		
	1.2	1200	776	10320	1.3	DRV050/110	7114
	0.9	1500	924	10320	1.2		
	0.8	1800	1010	10320	1.1		
	0.6	2400	1358	13500	1.0	DRV063/130	7114
	0.5	3000	1626	13500	0.8		
	0.4	4000	1910	13500	0.6		
	0.3	5000	2132	13500	0.5		
	0.8	1800	1199	18000	1.8	DRV063/150	7114
	0.6	2400	1446	18000	1.8		
	0.5	3000	1713	18000	1.4		
	0.4	4000	2026	18000	0.9		
	0.3	5000	2251	18000	0.7		
0.37	9.3	300	182	6270	1.3	DRV030/063	7112
	7.0	400	222	6270	1.0		
	4.7	300	383	7380	1.0	DRV040/075	7124
	3.5	400	474	7380	0.7		
	4.7	300	406	8180	1.5	DRV040/090	7124
	3.5	400	505	8180	1.2		
	2.8	500	593	8180	0.9		
	2.3	600	722	8180	0.8		
	1.9	750	837	10320	1.3	DRV050/110	7124
	1.6	900	928	10320	1.2		
	1.2	1200	1148	10320	0.8		
	0.9	1500	1444	13500	1.1	DRV063/130	7124
	0.8	1800	1586	13500	0.9		

P_{1n} (kw)	n_2 (r/min)	i	M_{2n} (Nm)	F_{r2} (N)	fs		
0.37	0.8	1800	1775	18000	1.2	DRV063/150	7124
	0.6	2400	2141	18000	1.2		
	0.5	3000	2535	18000	0.9		
0.55	9.3	300	305	8180	2.0	DRV040/090	7122
	7.0	400	375	8180	1.5		
	5.6	500	441	8180	1.2		
	4.7	300	615	10320	2.0	DRV050/110	8014
	3.5	400	810	10320	1.4		
	2.8	500	938	10320	1.1		
	2.3	600	1096	10320	1.0		
	1.9	750	1244	10320	0.9		
	2.8	500	957	13500	1.6	DRV063/130	8014
	1.9	750	1382	13500	1.2		
	1.2	1200	2057	13500	0.8		
	0.8	1800	2638	18000	0.8	DRV063/150	8014
	0.6	2400	3182	18000	0.6		
0.75	9.3	300	424	10320	2.8	DRV050/110	8012
	7.0	400	553	10320	2.1		
	5.6	500	640	10320	1.6		
	4.7	300	838	10320	1.5	DRV050/110	8024
	3.5	400	1105	10320	1.1		
	2.8	500	1305	13500	1.1	DRV063/130	8024
	2.3	600	1557	13500	1.0		
	1.9	750	1772	13500	0.9		
	1.6	900	2014	13500	0.8		
	2.8	500	1291	18000	1.8	DRV063/150	8024
	2.3	600	1529	18000	1.7		
	1.9	750	1783	18000	1.3		
	1.6	900	2215	18000	0.9		
	1.2	1200	2680	18000	1		
1.1	9.3	300	621	10320	1.9	DRV050/110	8022
	7.0	400	810	10320	1.4		
	5.6	500	938	10320	1.1		
	4.7	300	1274	13500	1.3	DRV063/130	90S4
	3.5	400	1621	13500	1.0		
	2.8	500	1913	13500	0.8		
	9.3	150	753	18000	3.1	DRV063/150	90S4
	7	200	966	18000	2.4		
	5.6	250	1175	18000	1.7		
	4.7	300	1364	18000	1.7		
	3.5	400	1619	18000	1.6		
	2.8	500	1893	18000	1.2		
	2.3	600	2242	18000	1.2		
	1.9	750	2616	18000	0.9		
1.5	9.3	300	878	13500	1.9	DRV063/130	90S2
	7.0	400	1105	13500	1.4		
	5.6	500	1305	13500	1.1		
	4.7	300	1737	13500	1.0	DRV063/130	90L4
	3.5	400	2210	13500	0.7		

P_{1n} (kw)	n_2 (r/min)	i	M_{2n} (Nm)	F_{r2} (N)	fs		
1.5	9.3	150	1026	18000	2.3	DRV063/150	90L4
	7	200	1317	18000	1.8		
	5.6	250	1602	18000	1.3		
	4.7	300	1860	18000	1.3		
	3.5	400	2208	18000	1.2		
	2.8	500	2582	18000	0.9		
	2.3	600	3057	18000	0.9		

8.3NMRV025尺寸 NMRV025SIZE

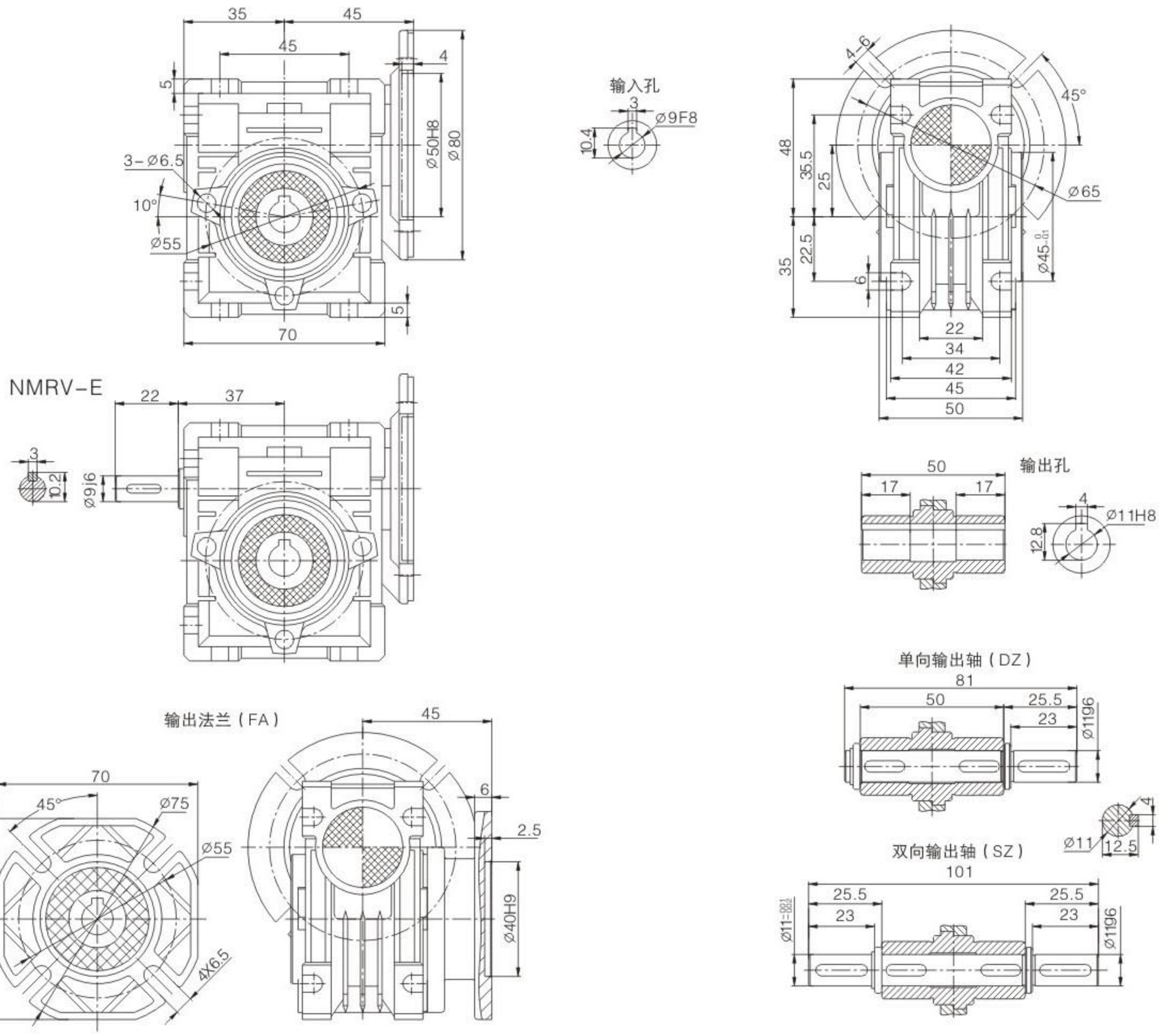

8.4NMRV尺寸 NMRV SIZE

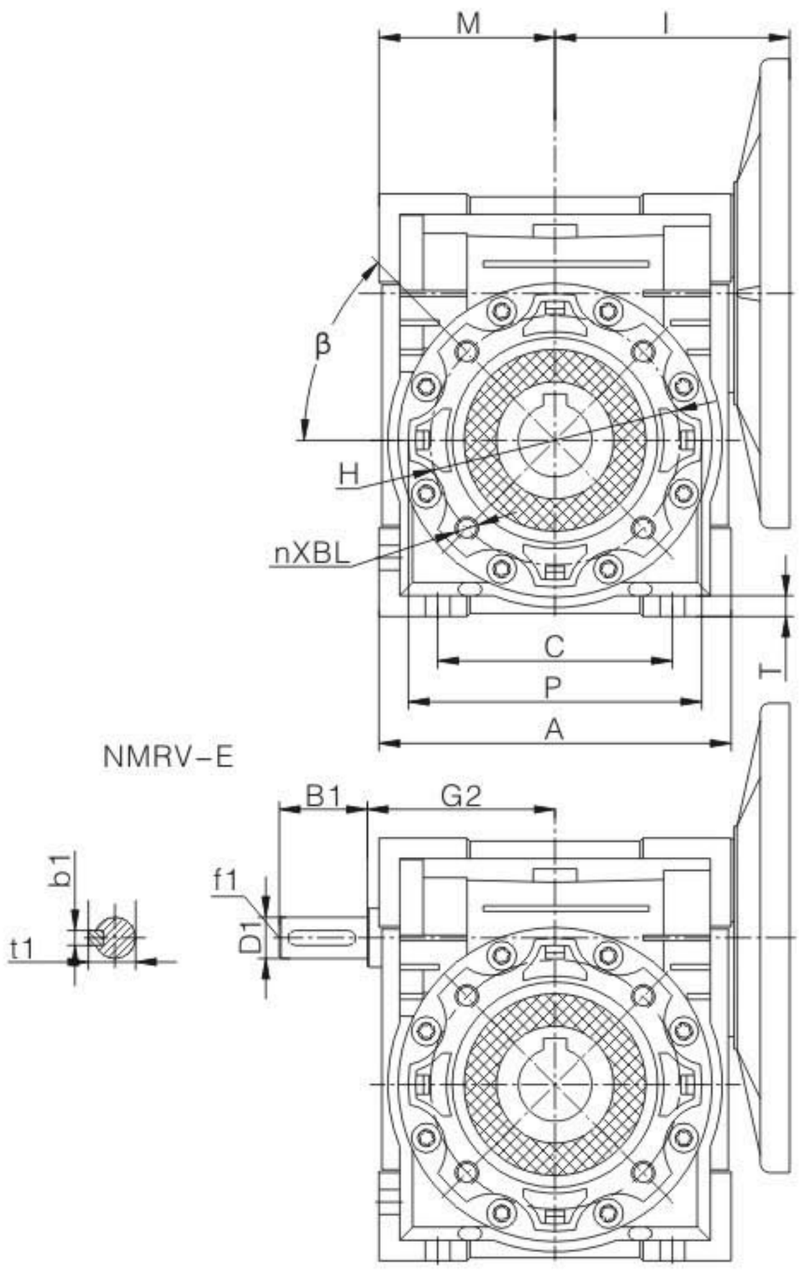

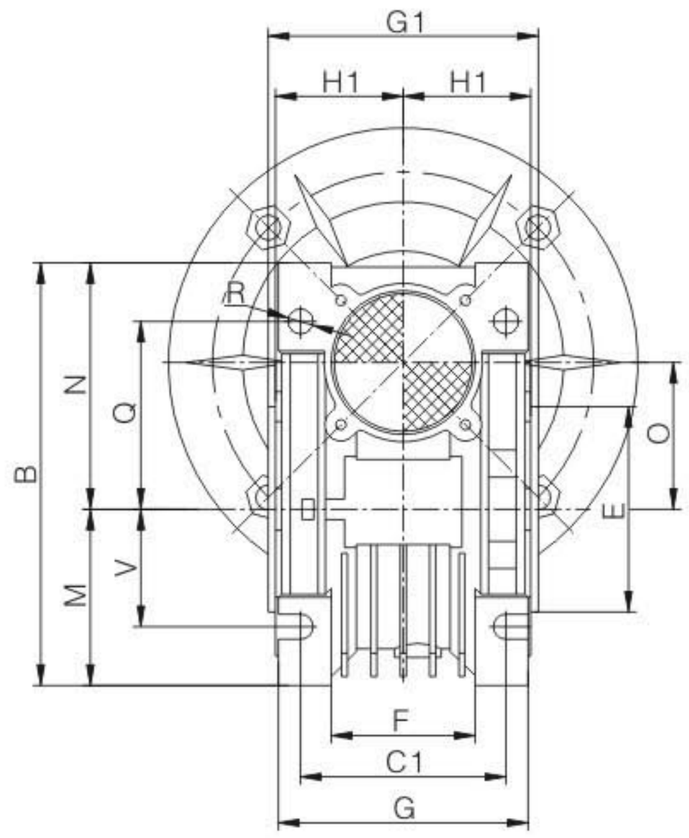

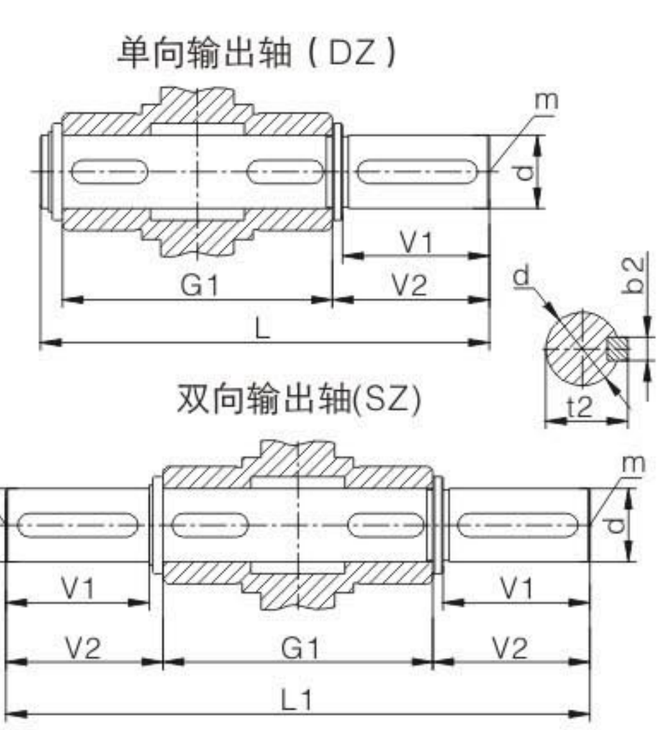

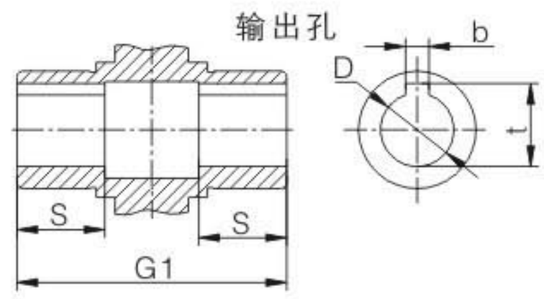

NMRV	A	B	B1	C	C1	D(H7)	D1(j6)	E(h8)	F	G	G1	G2	H	H1	I	L	L1	M	N	O	P	Q
030	80	97	20	54	44	14	9	55	32	56	63	45	65	29	55	102	128	40	57	30	75	44
040	100	121.5	23	70	60	18(19)	11	60	43	71	78	53	75	36.5	70	128	164	50	71.5	40	87	55
050	120	144	30	80	70	25(24)	14	70	49	85	92	64	85	43.5	80	153	199	60	84	50	100	64
063	144	174	40	100	85	25(28)	19	80	67	103	112	75	95	53	95	173	219	72	102	63	110	80
075	172	205	50	120	90	28(35)	24	95	72	112	120	90	115	57	112.5	192	247	86	119	75	140	93
090	206	238	50	140	100	35(38)	24	110	74	130	140	108	130	67	129.5	234	309	103	135	90	160	102
110	255	295	60	170	115	42	28	130	–	144	155	135	165	74	160	249	324	127.5	167.5	110	200	125
130	293	335	80	200	120	45	30	180	–	155	170	155	215	81	179	265	340	146.5	187.5	130	250	140
150	340	400	80	240	145	50	35	180	–	185	200	175	215	96	210	297	374	170	230	150	250	180

NMRV	R	S	T	BL	β	b	b1	b2	t	t1	d(h6)	t2	f1	m	V	V1	V2
030	6.5	21	5.5	M6 × 11(n=4)	0°	5	3	5	16.3	10.2	14	16.0	–	M6	27	30	32.5
040	6.5	26	6.5	M6 × 8(n=4)	45°	6	4	6	20.8(21.8)	12.5	18	20.5	–	M6	35	40	43.0
050	8.5	30	7	M8 × 10(n=4)	45°	8	5	8	28.3(27.3)	16	25	28.0	M6	M10	40	50	53.5
063	8.5	36	8	M8 × 14(n=8)	45°	8	6	8	28.3(31.3)	21.5	25	28.0	M6	M10	50	50	53.5
075	11	40	10	M8 × 14(n=8)	45°	8(10)	8	8	31.3(38.3)	27	28	31.0	M8	M10	60	60	63.5
090	13	45	11	M10 × 18(n=8)	45°	10	8	10	38.3(41.3)	27	35	38.0	M8	M12	70	80	84.5
110	14	50	14	M10 × 18(n=8)	45°	12	8	12	45.3	31	42	45.0	M10	M16	85	80	84.5
130	16	60	15	M12 × 21(n=8)	45°	14	8	14	48.8	33	45	48.5	M10	M16	100	80	85.0
150	18	72.5	18	M12 × 21(n=8)	45°	14	10	14	53.8	38	48	53.5	M12	M16	120	82	87.0

8.5NRV尺寸 NRV SIZE

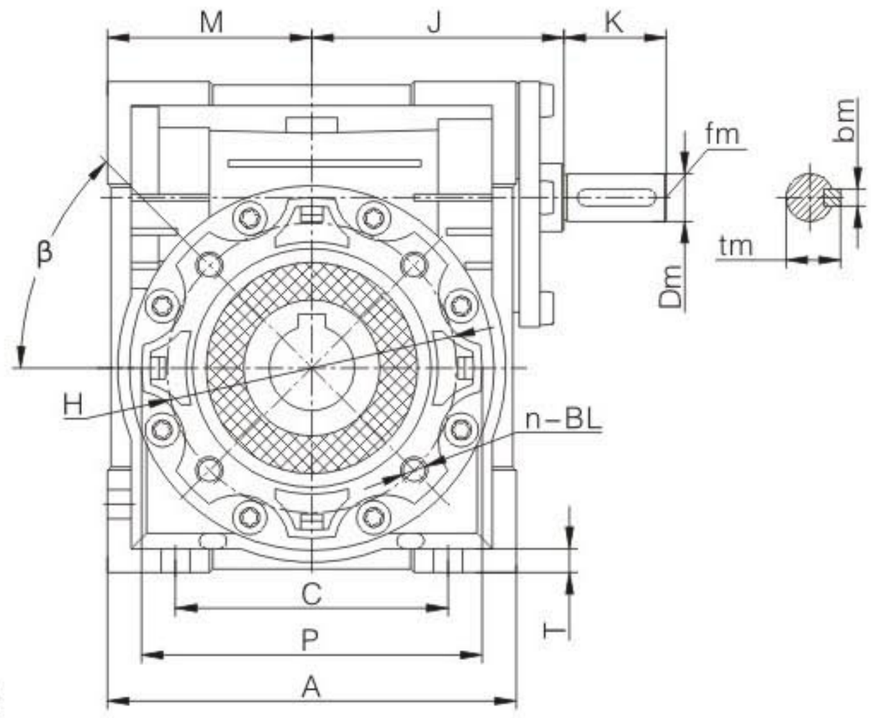

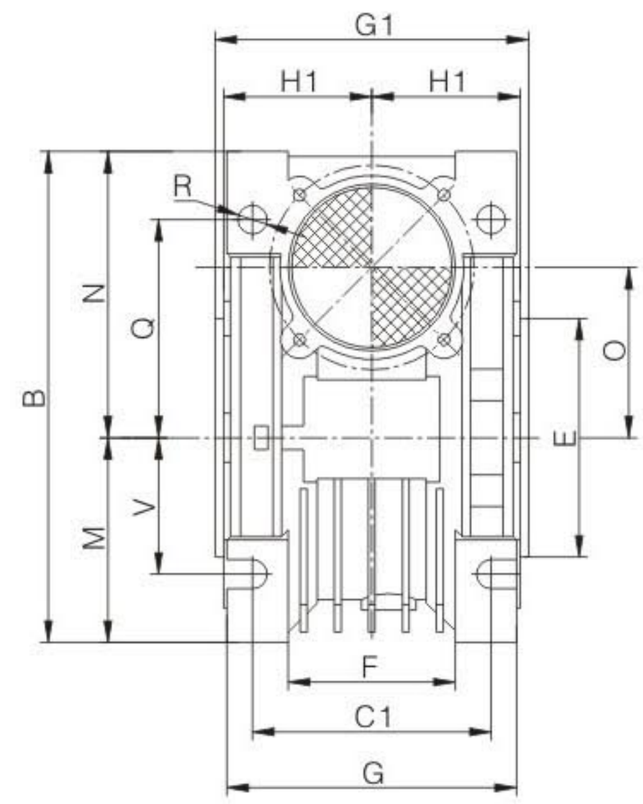

NRV-E

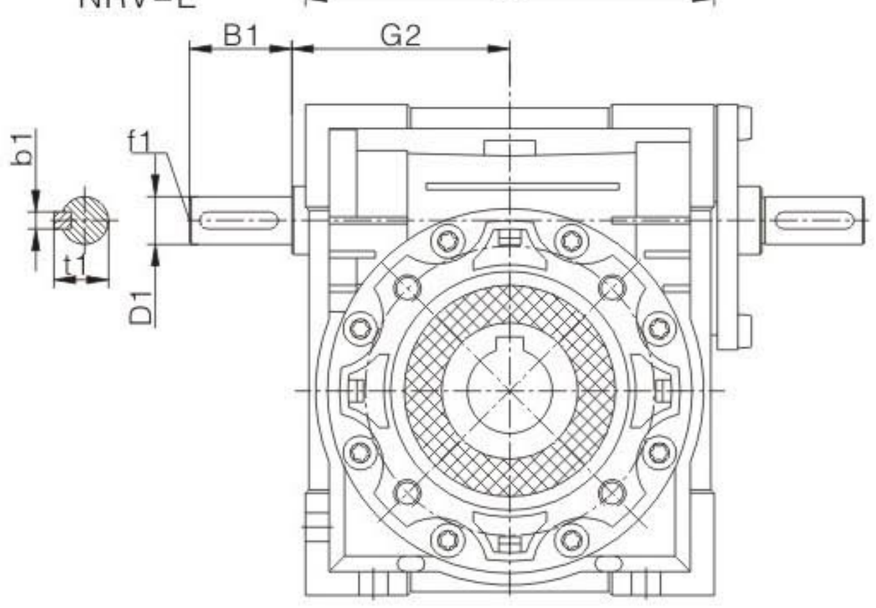

单向输出轴（DZ）

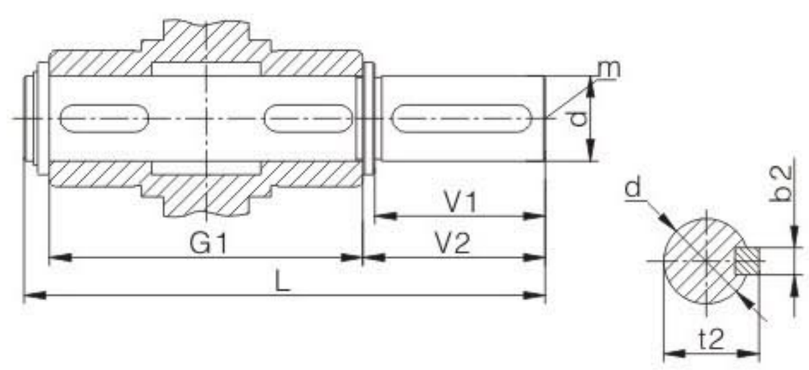

输出孔

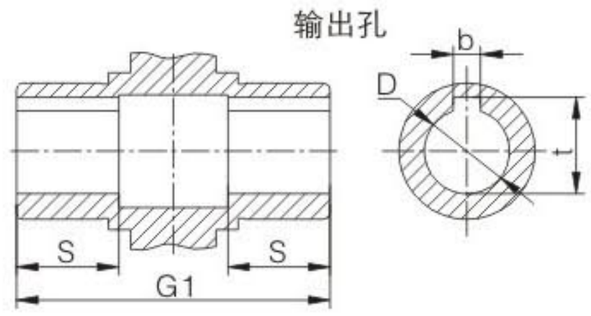

双向输出轴(SZ)

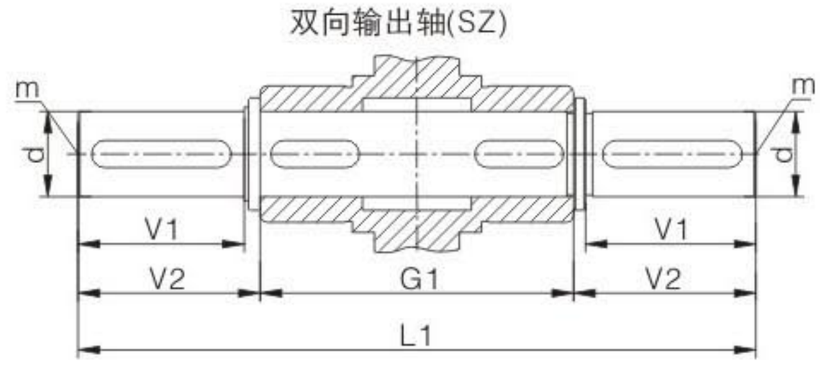

NMRV	A	B	B1	C	C1	D(H7)	D1(j6)	Dm(j6)	E(h8)	F	G	G1	G2	H	H1	J	K	L	L1	M	N	O	P	Q
030	80	97	20	54	44	14	9	9	55	32	56	63	45	65	29	51	20	102	128	40	57	30	75	44
040	100	121.5	23	70	60	18(19)	11	11	60	43	71	78	53	75	36.5	60	23	128	164	50	71.5	40	87	55
050	120	144	30	80	70	25(24)	14	14	70	49	85	92	64	85	43.5	74	30	153	199	60	84	50	100	64
063	144	174	40	100	85	25(28)	19	19	80	67	103	112	75	95	53	90	40	173	219	72	102	63	110	80
075	172	205	50	120	90	28(35)	24	24	95	72	112	120	90	115	57	105	50	192	247	86	119	75	140	93
090	206	238	50	140	100	35(38)	24	24	110	74	130	140	108	130	67	125	50	234	309	103	135	90	160	102
110	255	295	60	170	115	42	28	28	130	–	144	155	135	165	74	142	60	249	324	127.5	167.5	110	200	125
130	293	335	80	200	120	45	30	30	180	–	155	170	155	215	81	162	80	265	340	146.5	187.5	130	250	140
150	340	400	80	240	145	50	35	35	180	–	185	200	175	215	96	195	80	297	374	170	230	150	250	180

NMRV	R	S	T	BL	β	b	bm	b1	b2	t	tm	t1	t2	d(h6)	f1	fm	m	V	V1	V2
030	6.5	21	5.5	M6 × 11(n=4)	0°	5	3	3	5	16.3	10.2	10.2	16.0	14	–	–	M6	27	30	32.5
040	6.5	26	6.5	M6 × 8(n=4)	45°	6	4	4	6	20.8(21.8)	12.5	12.5	20.5	18	–	–	M6	35	40	43.0
050	8.5	30	7	M8 × 10(n=4)	45°	8	5	5	8	28.3(27.3)	16.0	16.0	28.0	25	M6	M6	M10	40	50	53.5
063	8.5	36	8	M8 × 14(n=8)	45°	8	6	6	8	28.3(31.3)	21.5	21.5	28.0	25	M6	M6	M10	50	50	53.5
075	11	40	10	M8 × 14(n=8)	45°	8(10)	8	8	8	31.3(38.3)	27.0	27.0	31.0	28	M8	M8	M10	60	60	63.5
090	13	45	11	M10 × 18(n=8)	45°	10	8	8	10	38.3(41.3)	27.0	27.0	38.0	35	M8	M8	M12	70	80	84.5
110	14	50	14	M10 × 18(n=8)	45°	12	8	8	12	45.3	31.0	31.0	45.0	42	M10	M10	M16	85	80	84.5
130	16	60	15	M12 × 21(n=8)	45°	14	8	8	14	48.8	33.0	33.0	48.5	45	M10	M10	M16	100	80	85.0
150	18	72.5	18	M12 × 21(n=8)	45°	14	10	10	14	53.8	38.0	38.0	53.5	50	M12	M12	M16	120	82	87.0

8.6DRV尺寸 DRV SIZE

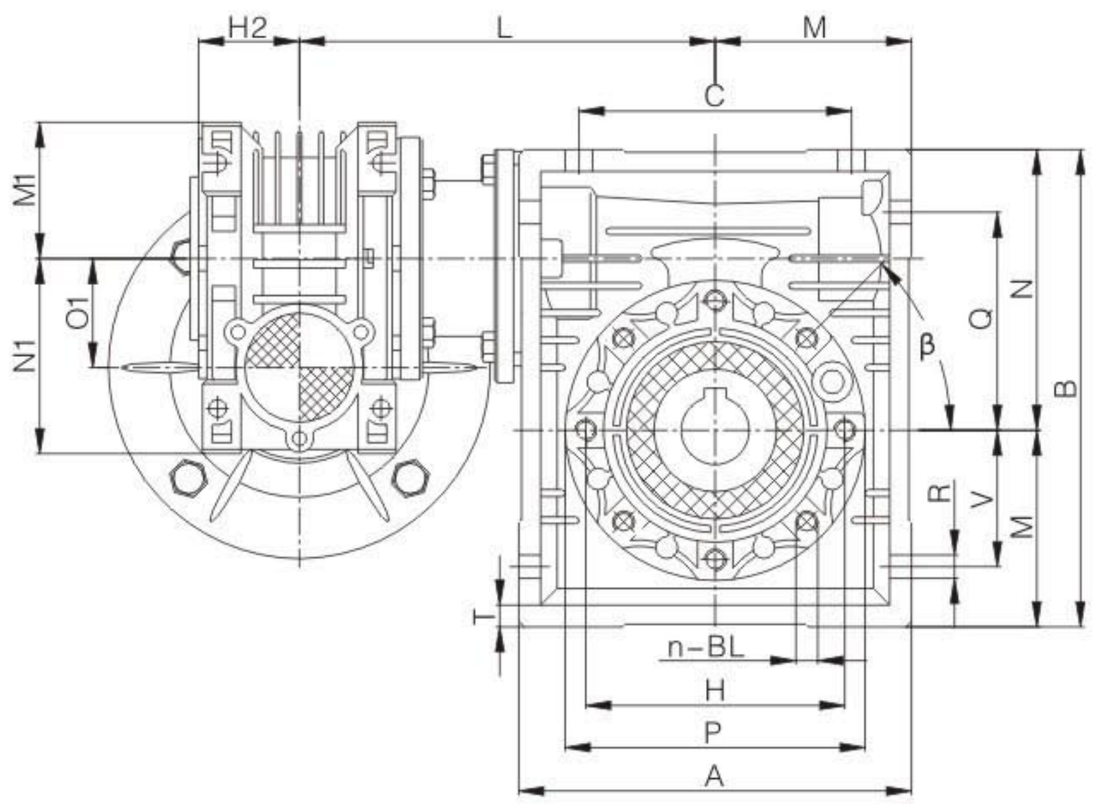

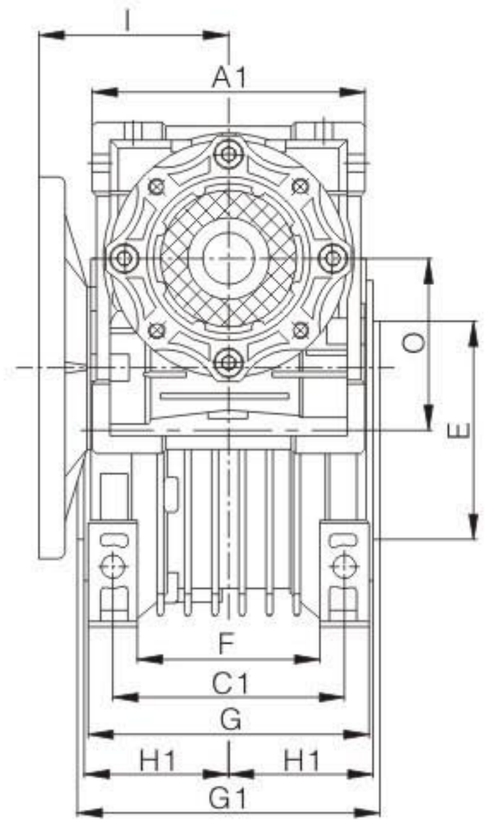

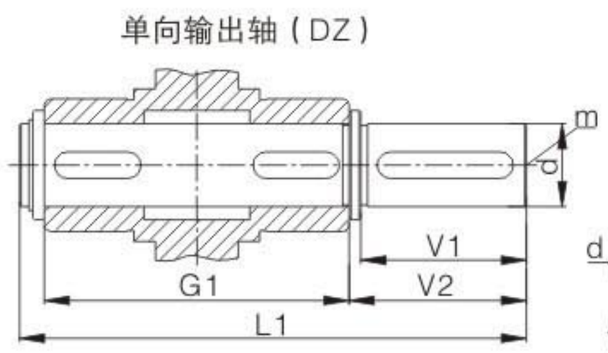

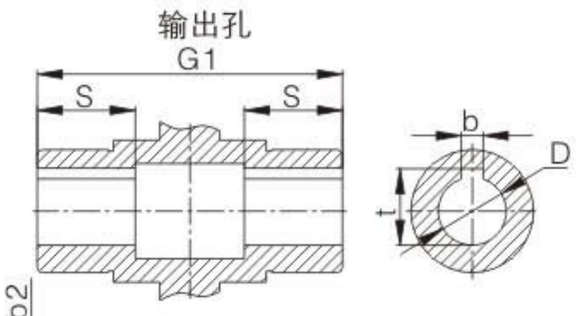

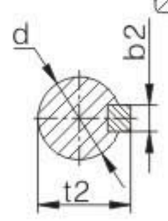

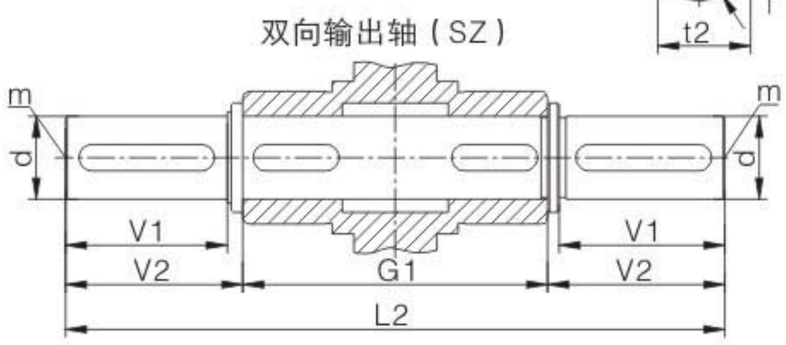

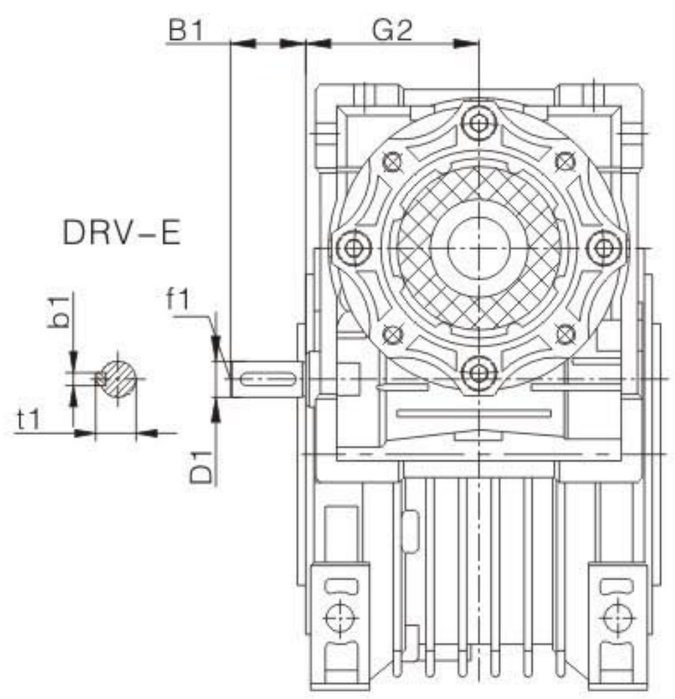

DRV	A	A1	B	B1	C	C1	D(H7)	D1(j6)	E(h8)	F	G	G1	G2	H	H1	H2	L	L1	L2	M	M1	N	N1	O	O1
025-030	80	70	97	–	54	44	14	–	55	32	56	63	–	65	29	22.5	100	102	128	40	35	57	48	30	25
025-040	100	70	121.5	–	70	60	18(19)	–	60	43	71	78	–	75	36.5	22.5	115	128	164	50	35	71.5	48	40	25
030-040	100	80	121.5	20	70	60	18(19)	9	60	43	71	78	51	75	36.5	29	120	128	164	50	40	71.5	57	40	30
030-050	120	80	144	20	80	70	25(24)	9	70	49	85	92	51	85	43.5	29	130	153	199	60	40	84	57	50	30
030-063	144	80	174	20	100	85	25(28)	9	80	67	103	112	51	95	53.0	29	145	173	219	72	40	102	57	63	30
040-075	172	100	205	23	120	90	28(35)	11	95	72	112	120	60	115	57.0	36.5	165	192	247	86	50	119	71.5	75	40
040-090	206	100	238	23	140	100	35(38)	11	110	74	130	140	60	130	67.0	36.5	182	234	309	103	50	135	71.5	90	40
050-110	255	120	295	30	170	115	42	14	130	–	144	155	74	165	74.0	43.5	225	249	324	127.5	60	167.5	84	110	50
063-130	293	144	335	40	200	120	45	19	180	–	155	170	90	215	81.0	53	245	265	340	146.5	72	187.5	102	130	63
063-150	340	144	400	40	240	145	50	19	180	–	185	200	90	215	96	53	275	297	374	170	72	230	102	150	63

DRV	P	Q	R	S	T	BL	β	b	b1	b2	t	t1	t2	d(h6)	f1	m	V	V1	V2
025-030	75	44	6.5	21	5.5	M6×11(n=4)	0°	5	–	5	16.3	–	16	14	–	M6	27	30	32.5
025-040	87	55	6.5	26	6.5	M6×8(n=4)	45°	6	–	6	20.8(21.8)	–	20.5	18	–	M6	35	40	43
030-040	87	55	6.5	26	6.5	M6×8(n=4)	45°	6(6)	3	6	20.8(21.8)	10.2	20.5	18	–	M6	35	40	43
030-050	100	64	8.5	30	7	M8×10(n=4)	45°	8(8)	3	8	28.3(27.3)	10.2	28	25	–	M10	40	50	53.5
030-063	110	80	8.5	36	8	M8×14(n=8)	45°	8(8)	3	8	28.3(31.3)	10.2	28	25	–	M10	50	50	53.5
040-075	140	93	11	40	10	M8×14(n=8)	45°	8(10)	4	8	31.3(38.3)	12. 5	31	28	–	M10	60	60	63.5
040-090	160	102	13	45	11	M10×18(n=8)	45°	10	4	10	38.3(41.3)	12. 5	38	35	–	M12	70	80	84.5
050-110	200	125	14	50	14	M10×18(n=8)	45°	12	5	12	45.3	16. 0	45	42	M6	M16	85	80	84.5
063-130	250	140	16	60	15	M12×21(n=8)	45°	14	6	14	48.3	21. 5	48.5	45	M6	M16	100	80	85
063-150	250	180	18	72	18	M12×21(n=8)	45°	14	6	14	53.8	21. 5	53.5	50	M6	M16	120	82	87

9.输出法兰（F）尺寸 OUTPUT FLANGE DIMENSIONS (F)

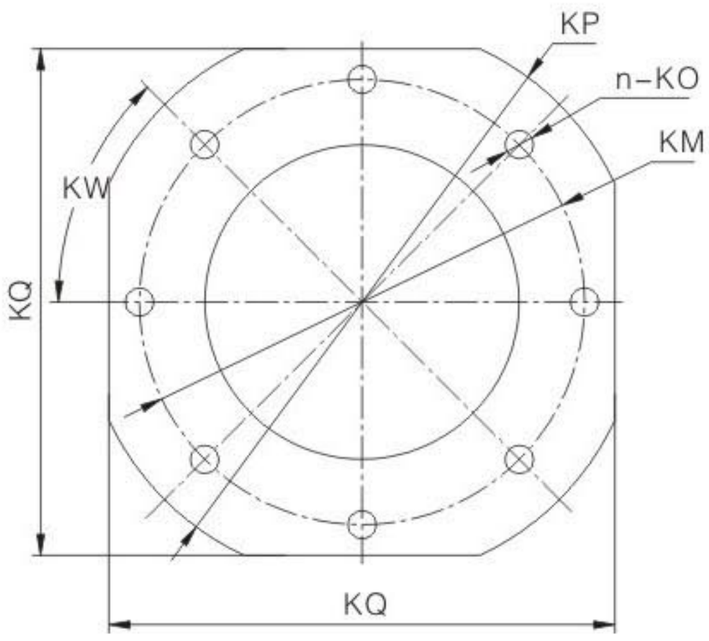

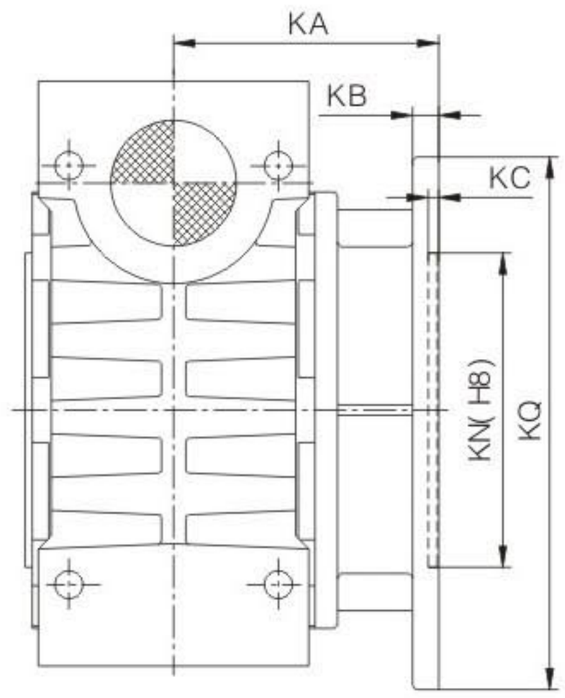

NMRV		030	040	050	063	075	090	110	130	150
FA	KA	54.5	67	90	82	111	111	139	152	155
	KB	6	7	9	10	13	13	15	15	15
	KC	4	4	5	6	6	6	6	6	6
	KN	50	60	70	115	130	152	170	180	180
	KM	68	75	85	150	165	175	230	255	255
	KO	6.5(n=4)	9(n=4)	11(n=4)	11(n=4)	14(n=4)	14(n=4)	14(n=8)	16(n=8)	16(n=8)
	KP	80	110	125	180	200	210	280	320	320
	KQ	70	95	110	142	170	200	260	290	290
	KW	45°	45°	45°	45°	45°	45°	45°	45°	22.5°
FB	KA	–	97	120	112	–	122	–	–	–
	KB	–	7	9	10	–	18	–	–	–
	KC	–	4	5	6	–	6	–	–	–
	KN	–	60	70	115	–	180	–	–	–
	KM	–	75	85	150	–	215	–	–	–
	KO	–	9(n=4)	11(n=4)	11(n=4)	–	14(n=4)	–	–	–
	KP	–	110	125	180	–	250	–	–	–
	KQ	–	95	110	142	–	–	–	–	–
	KW	–	45°	45°	45°	–	45°	–	–	–
FC	KA	–	80	89	98	–	110	–	–	–
	KB	–	9	10	10	–	17	–	–	–
	KC	–	5	5	5	–	6	–	–	–
	KN	–	95	110	130	–	130	–	–	–
	KM	–	115	130	165	–	165	–	–	–
	KO	–	9.5(n=4)	9.5(n=4)	11(n=4)	–	11(n=4)	–	–	–
	KP	–	140	160	200	–	200	–	–	–
	KW	–	45°	45°	45°	–	45°	–	–	–
FD	KA	–	58	72	107	–	151	–	–	–
	KB	–	12	14.5	10	–	13	–	–	–
	KC	–	5	5	5	–	6	–	–	–
	KN	–	80	95	130	–	152	–	–	–
	KM	–	100	115	165	–	175	–	–	–
	KO	–	9(n=4)	11(n=4)	11(n=4)	–	14(n=4)	–	–	–
	KP	–	120	140	200	–	210	–	–	–
	KW	–	45°	45°	45°	–	45°	–	–	–
FE	KA	–	–	–	80.5	–	–	–	–	–
	KB	–	–	–	16.5	–	–	–	–	–
	KC	–	–	–	5	–	–	–	–	–
	KN	–	–	–	110	–	–	–	–	–
	KM	–	–	–	130	–	–	–	–	–
	KO	–	–	–	11(n=4)	–	–	–	–	–
	KP	–	–	–	160	–	–	–	–	–
	KW	–	–	–	45°	–	–	–	–	–

10.扭力臂（A）尺寸 TORQUE ARM (A) SIZE

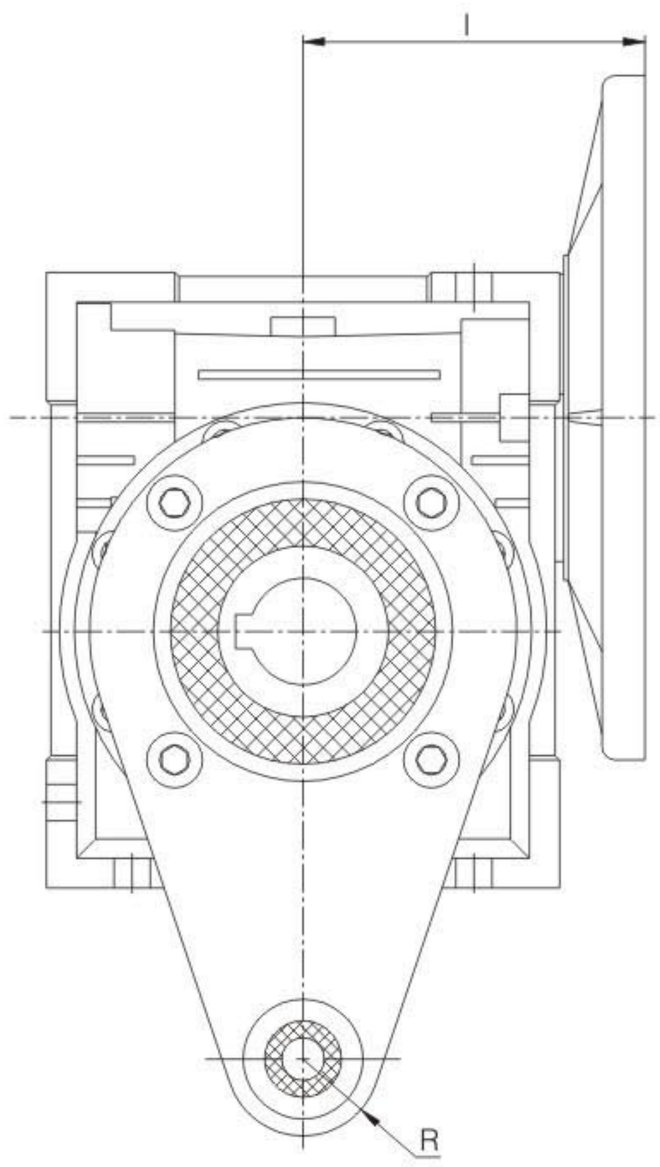

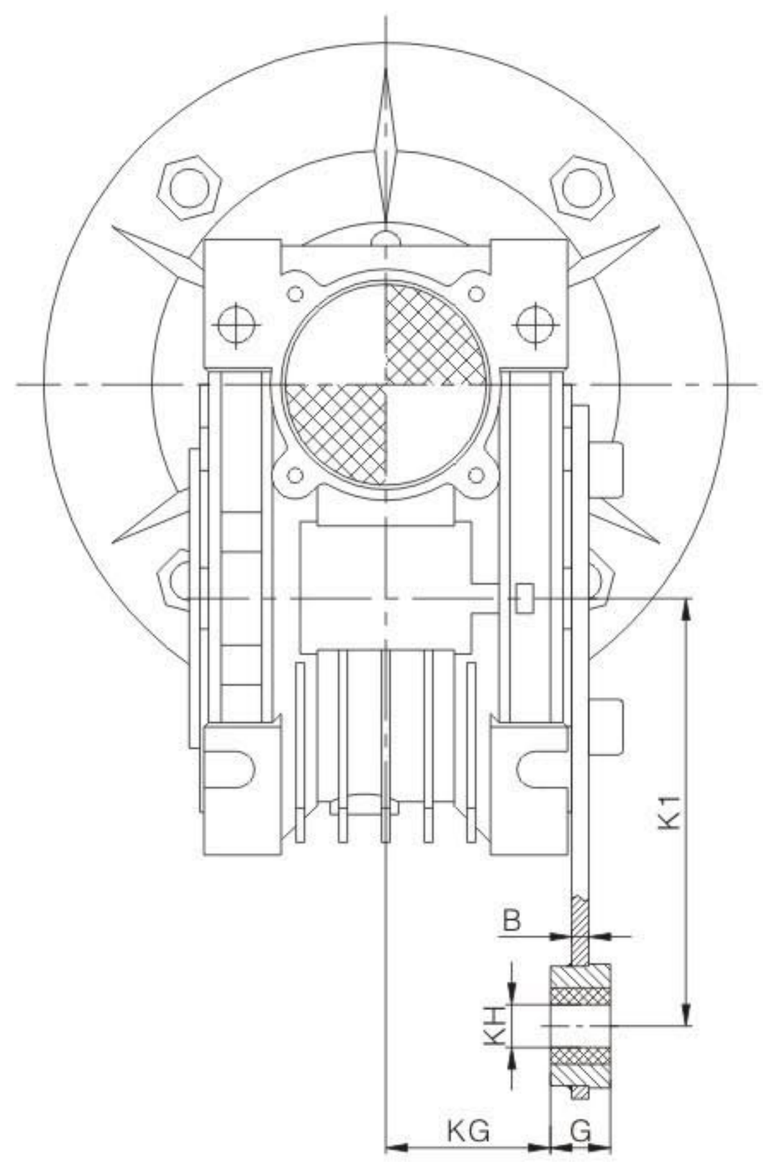

NMRV	B	I	K1	G	KG	KH	R
025	4	45	70	14	17.5	8	15
030	4	55	85	14	24	8	15
040	4	70	100	14	31.5	10	18
050	4	80	100	14	38.5	10	18
063	6	95	150	14	49	10	18
075	6	112.5	200	25	47.5	20	30
090	6	129.5	200	25	57.5	20	30
110	6	160	250	30	62	25	35
130	6	179	250	30	69	25	35
150	8	210	250	30	84	25	35

11.附件位置 THE ATTACHMENT POSITION

输出轴位置 THE OUTPUT SHAFT POSITION

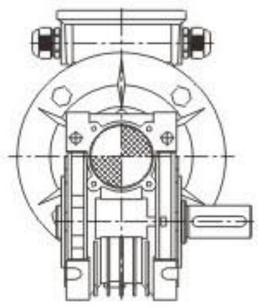

DZ1

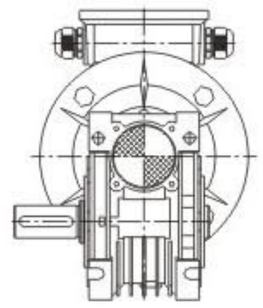

DZ2

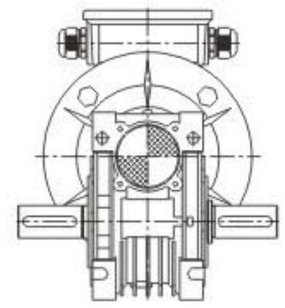

DZ

注：如没有特别说明，将按照如图DZ1和B3安装方面的组合样式供货。
Note:If there is no special instructions, will be as shown in figure SZ1 and B3 mounted with respect to the combination of styles available.

输出法兰位置OUTPUT FLANGE POSITION

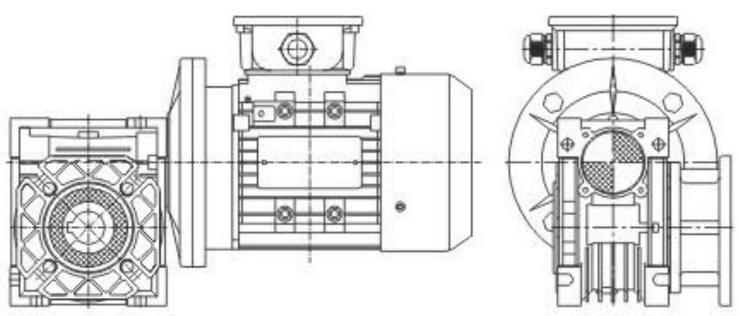

FA1、FB1、FC1、FD1、FE1

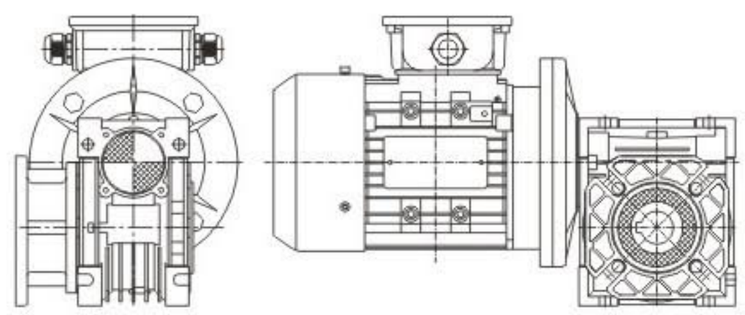

FA2、FB2、FC2、FD2、FE2

注：如没有特别说明，将按照如图F...1和B3安装方面的组合样式供货。
Note:If there is no special instructions, will be in accordance with the figure F... 1 and B3 mounted with respect to the combination of styles available.

电机接线盒位置 MOTOR TERMINAL BOX POSITION

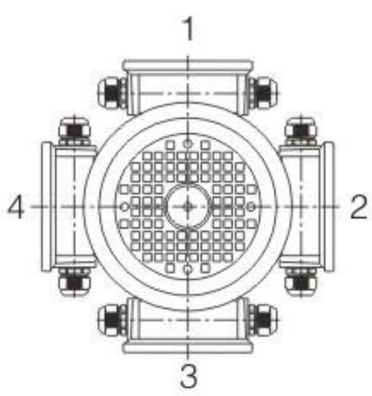

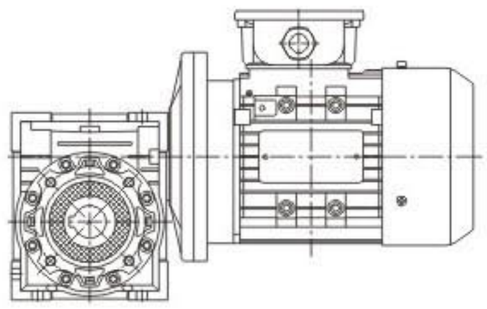

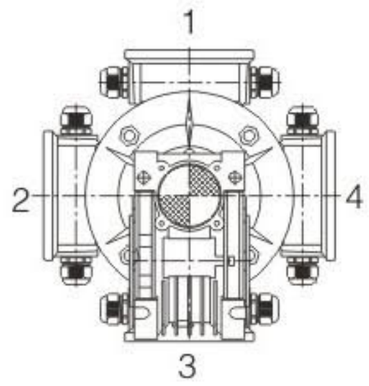

注:如对电机接线盒位置有特别要求，订购时须参考上图的要求指定接线盒方位,否则接线盒方位将按安装方位图表中的方位提供。
Note: if the motor terminal box position have special requirements, when ordering reference is made to the above requirements specified terminal box position, or junction box range according to installation position chart position is provided.

扭力臂(A)位置 TORQUE ARM (A) POSITION

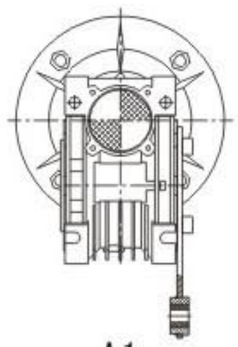

A1

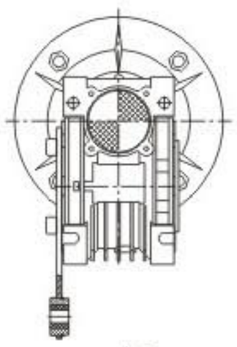

A2

注：如没有特别说明，将按照如图A1和B3安装方面的组合样式供货。
Note:If there is no special instructions, will be as shown in figure A1 and B3 mounted with respect to the combination of styles available.

尾出轴(E)位置 TAIL SHAFT (E) POSITION

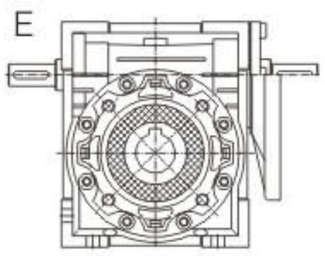

12.安装方位 INSTALLATION POSITION

12.1NMRV与电机安装方位 NMRV AND MOTOR MOUNTING POSITION

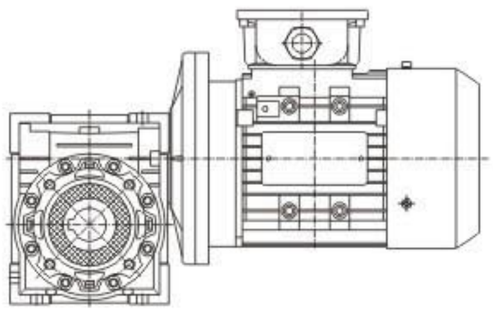

B3

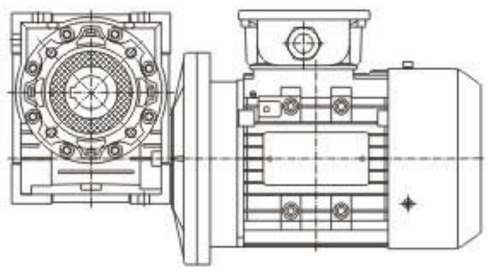

B8

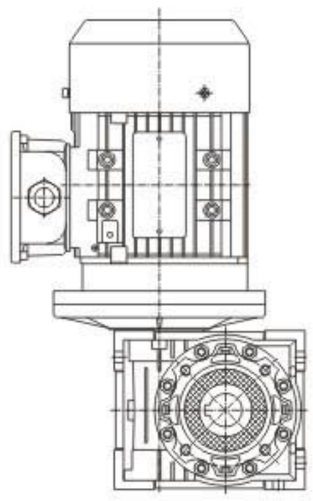

V5

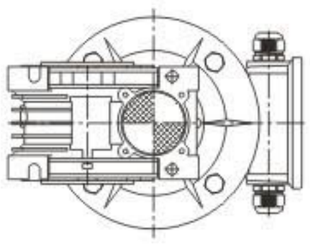

B6

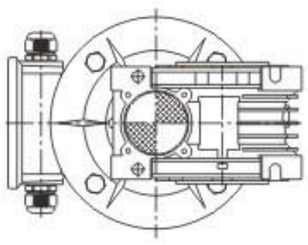

B7

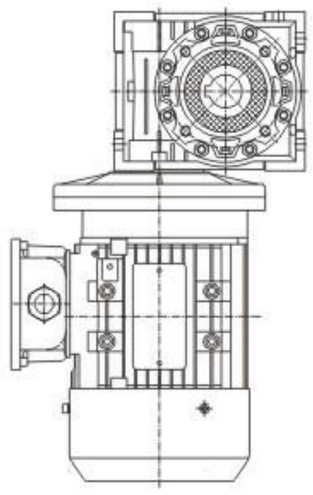

V6

12.2NMRV与PC安装方位 NMRV AND PC INSTALLATION POSITION

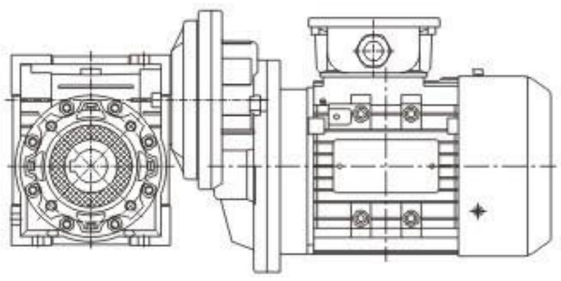

B3

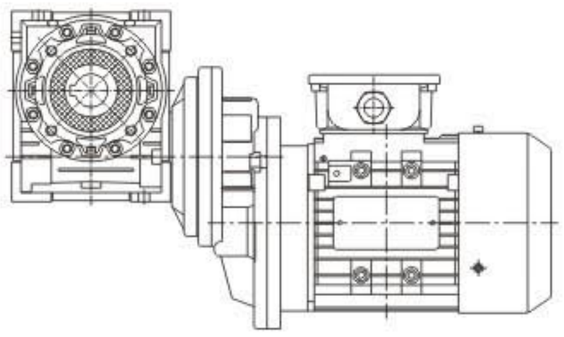

B8

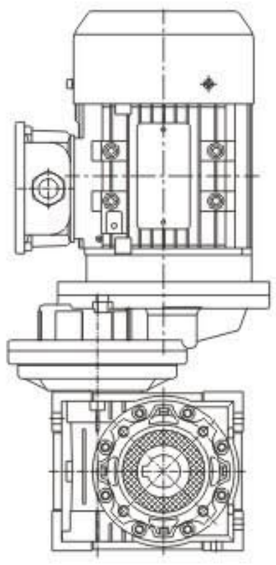

V5

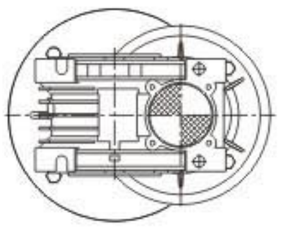

B6

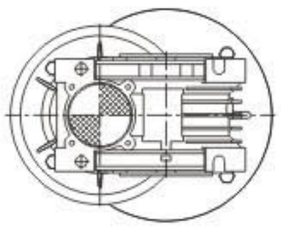

B7

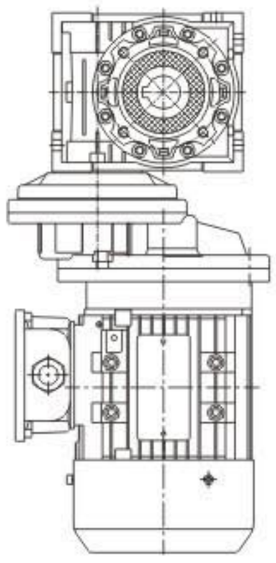

V6

12.3DRV组合带电机安装方位 DRV COMBINED WITH MOTOR MOUNTING POSITION

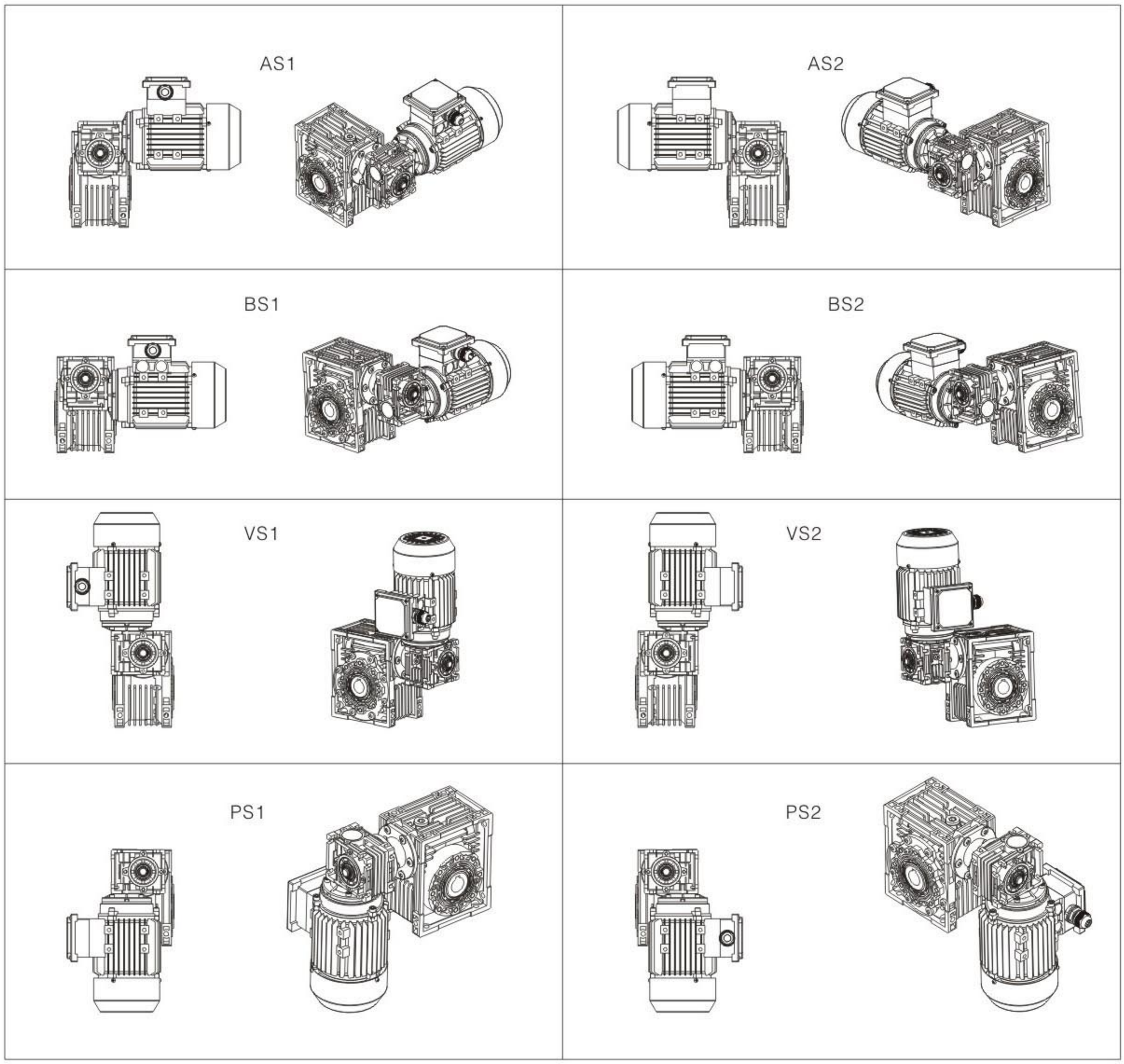

注：第一级和第二级减速器按上图方式组合，如在定货时没有特别说明，将按照BS2组合方式供货；第二级减速器实际安装方式参照23页的安装方位图。

Note: the first stage and the second stage reducer according to the above combinations, such as when the ordering is not specified, will be in accordance with the BS2 combination supply : second stage reducer practical mode of installation 23 installation azimuth diagram.

13.选型相关数据 RELEVANT DATA

13.1 前置斜齿轮减速器（PC）/PRESTAGE HELICAL GEARED UNITS (PC)

PC前置斜齿轮减速器是一种模块形式结构的产品，它可以与任何一种带有PAM输入法兰孔输入的减速器组合，各种不同的法兰和输出轴可以参见第11页。前置减速装置与马达组合以B14方式输出。该装置不能单独使用，只能与减速器配套使用。

The PC construction is modular and therefore it can be as a separate unit mounted on any type of fitted geared motor (PAM), whose the variouspossibilities of flange/output shafts can be found on page 11.

Fitting the pre-stage helical module on the main reduction unit is easily done as for any motor of type B14.The prestage unit cannot be used by itself,but only coupled with another preduction unit.

14.8 使用与保养 / OPERATION&MAINTENANCE

1.轴伸形式全部为圆柱形，按《圆柱形轴伸》GB1569-1990选定，键联接按《普通平键》GB1095-2003选定。
2.联轴器与电动机连接时应使轴线保持同心，安装误差不应大于所用联轴器的允许误差值。
3.输出轴装联轴器或带轮时，用轴端螺孔压入，或加热装备，严禁捶打！
4.机械无级变速器不宜用于可能超负荷或堵转适用场合。
5.调速应在运转进行，严禁停车转动调速手轮！
6.操作盒下的两端调速限位螺钉已调整好，请勿在动！
7.本机不宜工作在高于40℃的环境中，温升不得高于45℃。关于本机的温升请看下面的介绍：
变速器采用四极电机时，此时部件在跑合（空车运转）开始，温度高于正常工作的环境温度约40-50℃。跑合60-80小时后，温升逐渐下降，此后温度高于环境温度20℃,并保持稳定的温升，跑合时高的温升影响正常允许的工作条件，但对部件的使用寿命并无有害影响。
8.变速器采用润滑油油浴润滑。润滑油牌号为Ub-3x，使用前请检查油位。
9.出厂前润滑油已加入，首次使用2000小时后应更换润滑油，以后每隔5000小时换一次油。
10.变速器内润滑油应保持在油标的三分之二高度，用户应经常检查油位高度，严禁在润滑不良的情况下使用。操作盒上透气螺母出厂时为防止搬运中漏油已旋紧，运转时需松开，严禁未松开使用！

1.The shapes of shaft extension are all cylindrical.It is subject to GB1569-1990Cylindrical shaft extension.The key joint refers to GB1095-2003Ordinary flat key.
2.The shaft lines should be kept concentric when the coupling is connected with a motor.The installation error should be no more than the tolerance value of couplig.
3.When the output shaft is installed with the coupling or belt wheel,they should ba pressed into the screw hole on shaft end.Or assembled by heating.No hammering on it!
4.The mechanical stepless variator is not used in such an occasion where overload or running-blockage happen to occur.
5.Speed-regulation should ba effected in running.Do not turn the hand wheel of speed-regulation when the machine stops!
6.The limit screws of speed-regulation on two ends under the operating box are well adjusted,Please don't touch them!
7.This set is not suited to work in the environment over 40℃,especially no more than 45℃ when the temperature rises.In regared to its temperature rise.In regard to its temperature rise,please read the explanation as follows:
If a 4-pole motor is used for the speed variator,the temperature under running-in(empty running) is 40-50℃ higher than that of normal working environment.After running-in up to 60-80 hours,the temperature rise will go down gradually.From that time on,it is 20℃ higher than of environment,and the temperature will keep on rising stably.The high temperature rise in running will affect normal permis-sive woking condition,but it won't bring any bad effects to the service life of parts.
8.The liquid lubricating oil is used for the speed variator.Its trade mark is Ub-3x.Please check up the oil level before use.
9.The machine is filled with lubricating oil before leaving factory.When it starts to work up to 2000 hours for the first time,its lubricating oil should be replaced,changing the lubricating oil every 5000 hours later.
10.The lubricating oil level inside the speed variator should be kept at the height of two-third in the oil scale.Users should usually check the height of oillevel.It is strictly prohibited to operate it when short of lubricating oil.The air screw nut on the operating box is screwed up for preventing from oil leakage in moving before leaving factory.It should ba loosed when it starts to run.It is strictly forbidden to use it before loosing!

15.安装/INSTALLATION

15.1注意事项

安装减速器时要注意以下一些事项：
1.减速器与机械设备装配之前，要检查减速器输出轴的旋转方向是否正确。
2.减速器与原动机、设备装配之前，应检查各轴径、孔径、键和键槽的偏差尺寸，避免装配过紧、过松影响减速器性能。
3.减速器必须牢固地安装在机械设备上，避免有松动或振动。
4.尽可能地避免减速器暴露在烈日阳光下和恶劣环境中。
5.如果减速器存放时间长达4-6个月，应检查油封是否浸润在润滑油中，可能油封唇口会粘在轴上，甚至失去了弹性，由于适当的弹性是油封必须的工作条件，所以推荐更换油封。
6.所有橡胶件和透气孔不能沾有油漆。
7.与减速器的空心轴配合连接时，应在轴上配合部分涂上润滑油，以免卡死或氧化。
8.使用时必须检查油位（如油位镜孔或打开油塞，小型号是没有的）
9.使用新减速器时，不能满负载起动，应该逐步增大负载。
10.使用各类电机直联型减速器时，若电机重量偏大，应设支撑装置。
11.确保电机风扇附近有良好的通风环境，以免影响散热效果。
12.减速器的标准工作环境温度是-5℃至40℃，如果不在这范围时，请与我们技术服务人员联系。

14. 1 NOTE RECOMMENDATIONS

To install the reduction unit it is necessary to note the following recommendations:
1.Check the correct direction of the reduction unit output shaft before fitting the unit to the machine
2.Before mount with the prime mover and device,please check the reducer's every axial diameter,aperture,key and key slot, to be sure their dimension are not deviation,and aviod assembling too tight or too loose,unless it will influence the reducer's performance
4.Whenever possible,protect the reduction unit aganist solar radiation and bad weather
5.In the case of particularly lengthy periods of storage(4-6 months),if the oil seal is not immersed in the luricant inside the unit,it is recommended to change it since the rubber could stick to the shaft or may even have lost the elasticity it needs to function properly
6.Painting must definitely not go over rubber parts and the holes on the breather plugs,if any 7.When connect with hollow or solid shaft,please grease the joint to aviod lock or oxidation
8.Check the correct level of the lubricant through the indicator,if there is one
9.Starting must take place gradually,without immediately applying the maxium load
10.Supporting unit is required when using various of reducer matched with motor directiy and the good passage of air from the fan side 12.In the case of ambient temperatures < -5℃or > +40℃ call the Technical Service

15.2使用限制 / CRITICAL APPLICATIONS

这本样本给出的参数基本上是按B3安装方位来编的，即第一级没有完全浸入油中。对于其他安装方位和输入转速，请参考下面表格中相应参数。当遇到下列应用情况时，如有必要请与我们技术服务人员联系

1.在原有上提高转速时
2.应用在惯性特别大的设备上时
3.应用在如升降机（需要自锁考虑）时
4.当减速器出现故障有可能会对操作者造成危害时
5.应用在减速器过度疲劳状态时
6.工作环境温度低于-5℃或高于40℃时
7.在化学腐蚀环境中使用时
8.在盐性环境中使用时
9.在辐射性高的环境中使用时
10.在环境气压不在正常大气压力下使用时
11.安装方位在这样本中没有提到时
避免把减速器部分或整台浸入水里或其他液体中
减速器承受的最大负载扭矩不能超过两倍于性能参数表中规定的正常扭矩（当使用参数fs=1时）：这里最大负载扭矩是指能承受瞬间短暂的过载，它出现在过载启动、刹车、振动或其他动态操作环境中

The performance given in the catalogue corre-spond to mounting position B3 or similar,when the first stage is not entirely immersed in oil.For other mounting positions and/or particular input speeds,refer to the tables that highlight different critical situations for each size of reduction unit.It is also necessary to take due consideration of and caeafully assess the following applications by calling our Technical Service

1.As a speed increasing 2.Applications with especially high inertia
3.Use as a lifting winch
4.Use in services that could be hazarodous for people if the reduction unit fails
5.Applications with high dynamic strain on the case of the reduction unit.
6.In places with T° under -5℃or over 40℃
7.Use in chemically aggressive environments
8.Use in a salty environments
9.Use in radioactive environments
10.Use in environments pressures other than atmospheric pressure
11.Mounting positions not envisaged in the catalogue
Avoid applications where even partial immersion of the reduction unit is required
The maximum toreque that the gear reducer can support must not exceed two times the norminal torque(fs=1)stated in the performance tables.Intended for momentary overloads due to starting at full load,braking,shocks or other causes,particularly those that are dynamic.

16.润滑油/LUBRICATION

工作环境温度不在表中范围内时，请与我们技术服务人员联系。

● 当工作环境温度低于-30℃或高于60℃时，要使用特殊材质的油封

● 当工作环境温度低于0℃时，必须考虑下列情况：

→选用的电机必须在低温下能正常工作

→ 电机的功率必须满足在低温下有较大启动扭矩要求

→ 如果减速器箱体的材质是铸铁，在温度-15℃以下时，箱体会变的很脆，要注意尽量避免撞击

→ 在开始使用阶段时，由于润滑油的粘度很高，可能会产生一些问题，所以刚开始启动时最好让它空载运转几分钟

减速器运转大约10000小时后，应更换润滑油，换油频率按减速器实际运行情况和工作环境条件而定

○ NMRV030、040、050、063、075、090规格的减速器在出厂时已加注了润滑油，可以按照样本中安装方位所提到的方位安装。V5或V6安装时，请与我们技术服务人员联系

○ 减速器NMRV110、130和150规格在出厂时已加注了矿物润滑油（SHELL Omala OIL 460）

○ 无级变速器在出厂时也加注了矿物润滑油（广研Ub-3x）

○ 减速器NMRV110、130和150规格的安装方位在下单时要说明，否则润滑油量按B3方位提供

○ NMRV系列的减速器，在特定的工作环境，需配排气阀（可选配件）

○ PC已加注了耐用的合成油润滑油（SHELL TEVELA OIL 320）,因此能够安装成任何方位

In cases of ambient temperature not envisaged in the table,call our Technical Service.

● In the case of temperature under -30℃ or over 60℃ it is necessary to use oil seals with special material

● For operating ranges with temperatures under 0℃it is necessary to consider the following

→ The motors need to be suitable for operation at the envisaged ambient temperature → The power of the electric motor needs to be adequate for exceeding the higher starting torques requrired

→ In the case of reduction units with a cast-iron case,pay attention to impact loads since cast iron may have problems of fragility at temperatures under -15℃

→During the early stages of service,promblems of lubrication may arise due to the high level of viscosity taken on by the oil and so it is wise to have a few minutes of rotation under no load

○ The oil needs to be changed after approximately 10000 hours.This period depends on the type of service and the environment where the reduction unit works.

○ The reduction units size TNRV025-030-040-050-063-075-090-are supplied complete with lubricant ,and can therefore be mounted in any position envisaged in the catalogue.V5/V6 for which you should call our Technical Service to assess the conditions of use.

○ The reduction units size 110 an 130 are supplied complete with lubricant,mineral oil,(SHELL TEVELA OIL 320)

○ The variator speed are supplied complete with lubricant,mineral oil (GUANGYAN Ub-3x)

○ For sizes 110 and 130 it is necessary to specify the position,otherwise the reduction units are supplied with the quantity of oil relating to pos. B3.

○ TNRV series worm gearbox should mount breather plug (optional parts) under special working condition

○ PC.is supplied complete with lift-long lubricant,synthetic oil(SHELL TEVELA OIL 320),and can therefore be mounted in all the positions.

16.1润滑油选用表/LUBRICANTS OIL CHOSEN TABLE

	℃ -50 0 50 +100	ISO	SHELL	AGIP	ESSO	MOBIL	CASTROL	BP	广研	
NMRV025~090 PC063~090	-25 +50	VG320	Tivela OIL S320	Telium VSF320	S220	Glygoyle 30	Alphasyn Pg320	Energol SG-XP320		合成油 Synthetic oil
NMRV110~150	-5 +40	VG460	Omala OIL460	Blasia 460	Spartan Ep460	Mobilgear 634	Alpha MAX 460	Energol GR-XP460	CKE460	矿物油 Mineral oil
	-15 +25	VG220	Omala OIL220	Blasia 220	Spartan Ep220	Mobilgear 630	Alpha MAX 220	Energol GR-XP220		
UDL	-25 +40	Vg32	A.T.F.DXRON	A.T.F.DXRON	A.T.F.DXRON	A.T.F.220	TQ.DXRONⅡ	Autran DX	Ub-3x	矿物油 Mineral oil

16.2 润滑油加注量/LUBRICANT FILL QUANTITY

型号 \ 安装方位	B3	B8	B6、B7	V5、V6
NMRV025	0.02			
NMRV030	0.042			
NMRV040	0.081			
NMRV050	0.153			
NMRV063	0.30			
NMRV075	0.58			
NMRV090	1.02			
NMRV110	3.02	2.25	2.55	3.02
NMRV130	4.55	3.35	3.55	4.55
NMRV150	7	5.1	5.4	5.4
PC063	0.05			
PC071	0.07			
PC080	0.15			
PC090	0.16			

型号 \ 安装方位	B3、B5	V1、V5	V3、V6
UDL002	0.15		
UDL005	0.13		
UDL010	0.33		0.45
UDL020	0.8		1
UDL030S/L	1.2		1.2

表格规定的加注量为参考值，准确值的变化与传动比和安装方式有关。
The fill quantity in the table is referenced,the exact value velating to the ratio and mounting positions.

17.定货须知/NOTICE FOR ORDERING

1.定货时请根据使用需要的转速范围，输出转矩，结构形式，对照性能参数表、尺寸表、安装和操作方位图，合理选择机型，写明型号标记（下单时是否带电机请说明，一般按不带电机供应）。定货时选择的安装方位应与安装方法一致，不然容易造成漏油影响使用寿命，若安装方位特殊请另加说明。
2.定货时请尽量选择用本目录内的标准产品，如有特殊要求或配用特殊电机请附加说明。

1.Please refer to the sheet of performance parameter、NMRV series dimensions、Mounting and operation positions diagram,make reasonable choice of model,and write down model mark to your required revolution scope,output torque and structural form on ordering(when ordering,you should show whether the reducers are equipped with motors,otherwise reducers aren't supplied with motors)
2.Please make the best choice of standard products in this catalogue,and give an additional explanation for your special requirement and motors.

技术服务电话：010-52869110

售前服务请联系您的专属服务商

本区服务电话: